SUN 2105 E1 - 3105 E1 / TE1

Поставщик в Республике Беларусь,
Частное предприятие "Движение Воды"
Тел.: 8 (029) 183-85-06, E-mail:1838506@mail.ru

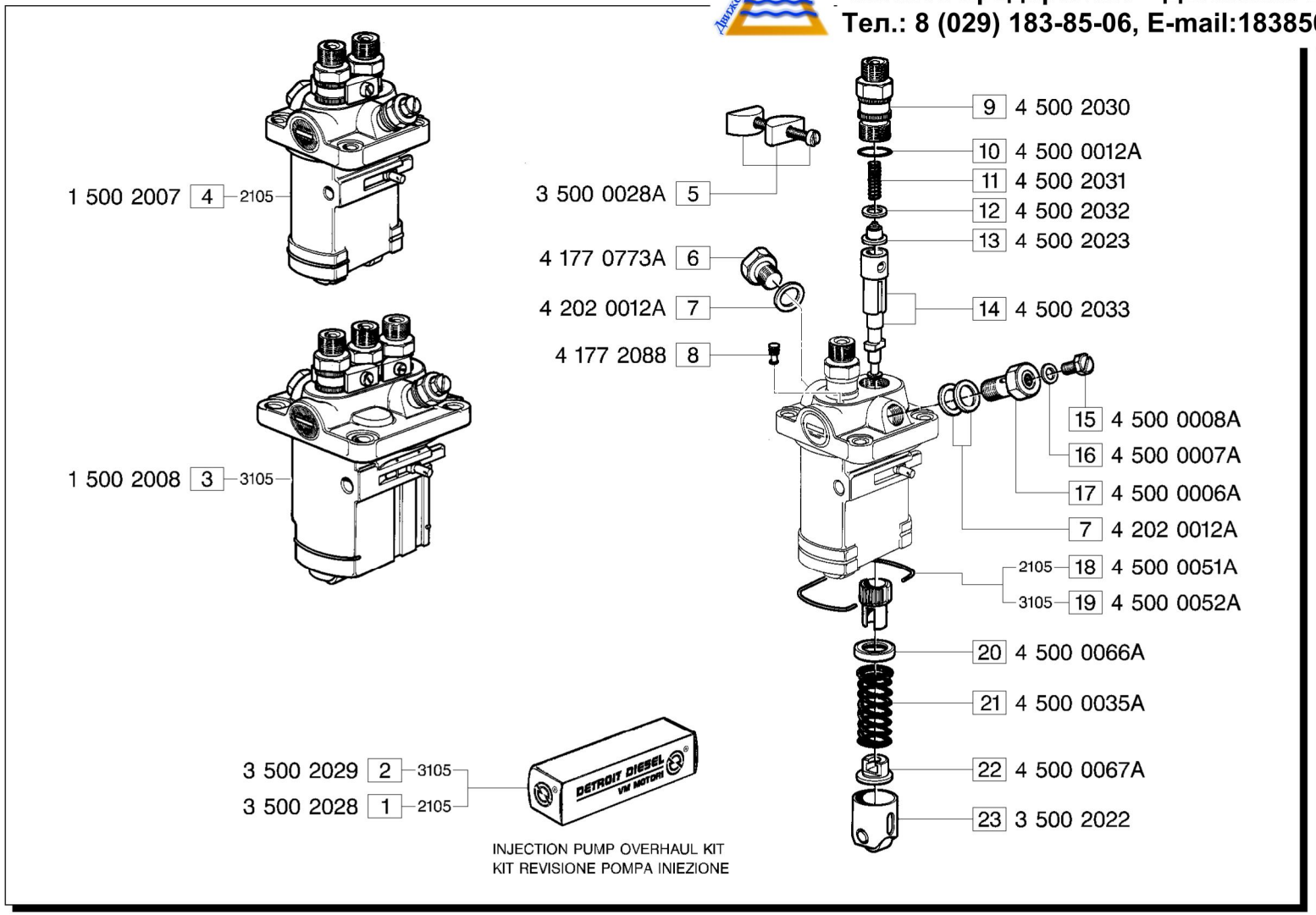

INJECTION PUMP OVERHAUL KIT
KIT REVISIONE POMPA INIEZIONE

N.	Codice	ICHE-ÄNDERUNGEN-MODIFICACIÓN SIMBOLS SIMBOLI △	▲	⧄	EC	Up to serial nr. Fino a matricola

Pos. N.	DESCRIPTION DESCRIZIONE	Quantity (Q.tà) 2105	3105	4105	6105	Pos. N.	DESCRIPTION DESCRIZIONE	2105	3105	4105	6105	Pos. N.	DESCRIPTION DESCRIZIONE	2105	3105	4105	6105
1	OVERHAUL PUMP KIT	1				8	PLUG	1	1			17	UNION SCREW	1	1		
2	OVERHAUL PUMP KIT		1			9	UNION	2	3			18	LOCKWASHER	1			
3	INJECTION PUMP ASS.LY		1			10	GASKET	2	3			19	LOCKWASHER		1		
4	INJECTION PUMP ASS.LY	1				11	UPPER SPRING	2	3			20	UPPER SPRING PLATE	2	3		
5	CONNECTOR ASS.LY	1	2			12	GASKET	2	3			21	LOWER SPRING	2	3		
6	PLUG	1	1			13	DELIVERY VALVE	2	3			22	LOWER SPRING PLATE	2	3		
7	GASKET	3	3			14	INJECTION PUNGER	2	3			23	TAPPET ASS.LY	2	3		
						15	SCREW	1	1								
						16	GASKET	1	1								