OLI80 | EVO 250

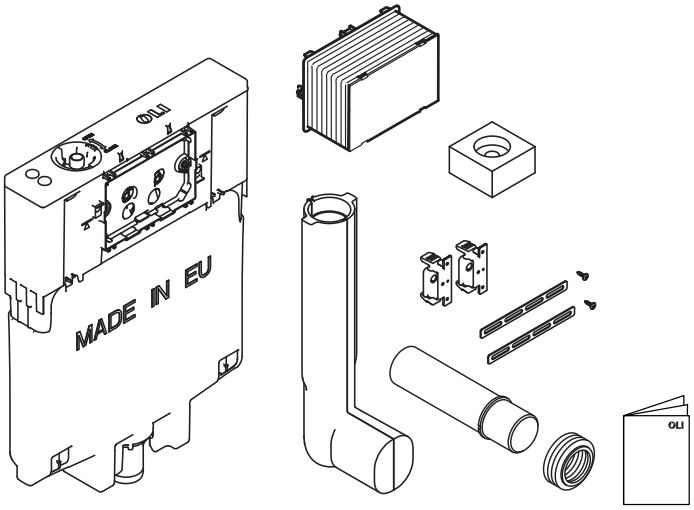

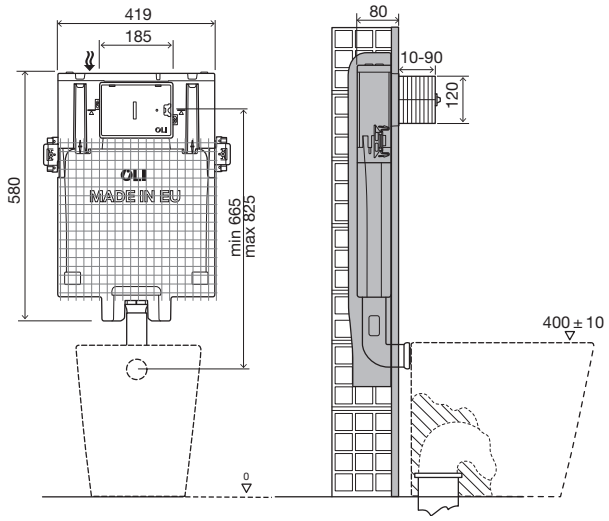

(dimensions in millimeters)

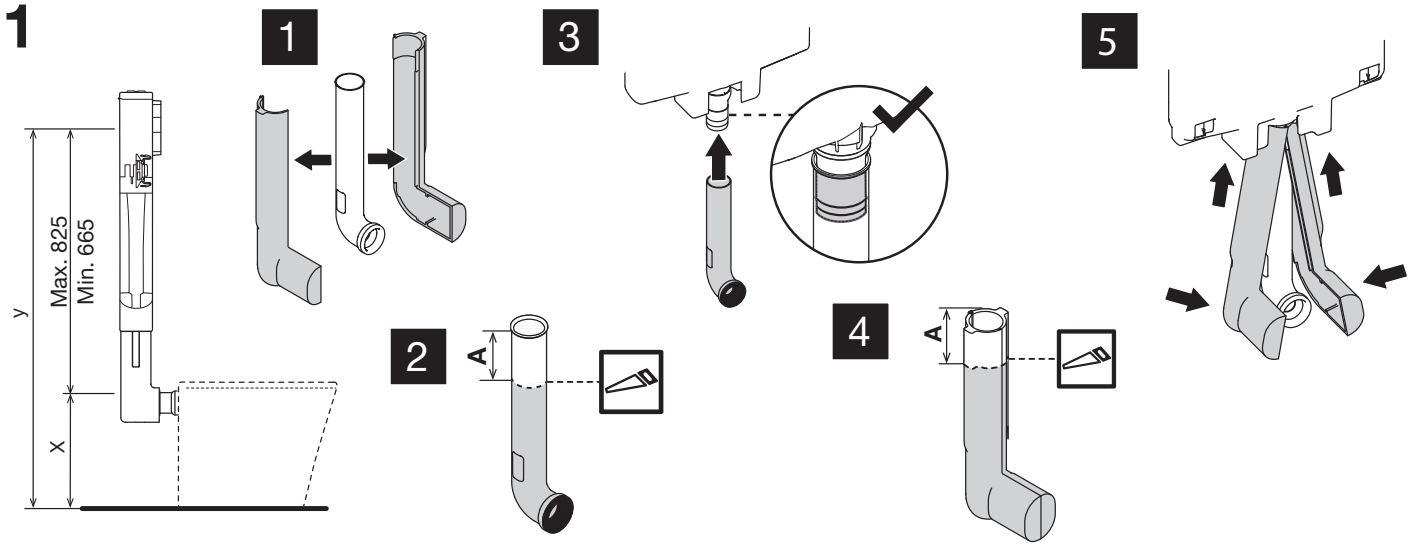

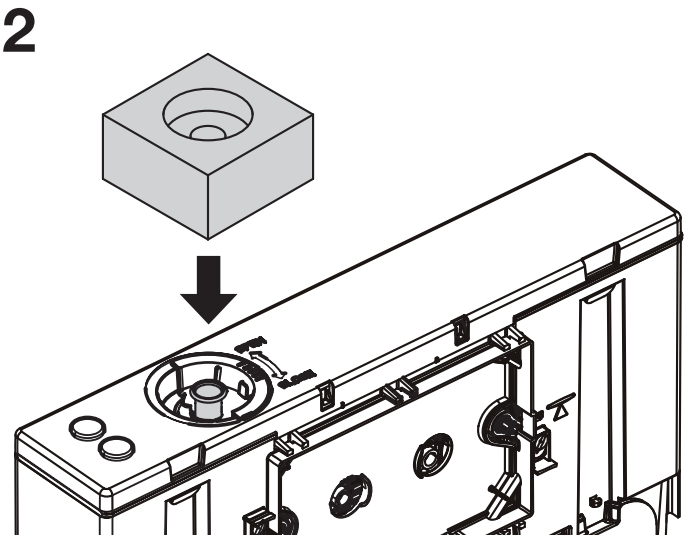

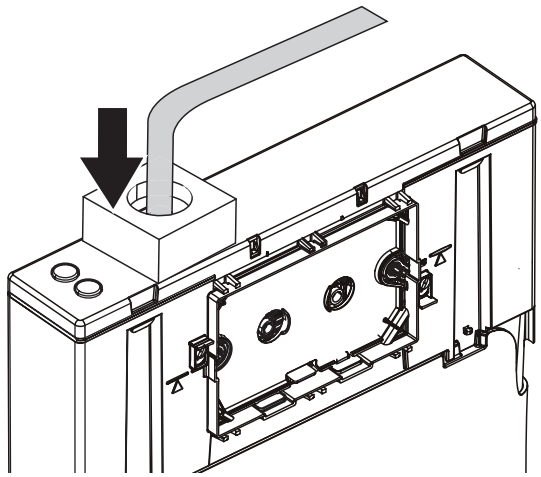

www.oli-world.com

comercial@oli-world.com | info@olisrl.it

AC10000122758.0

4

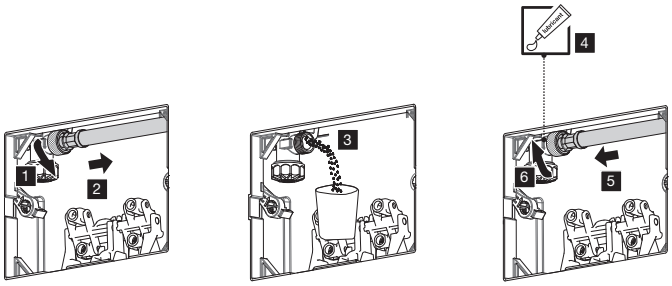
1
2
3
4
5
6

5

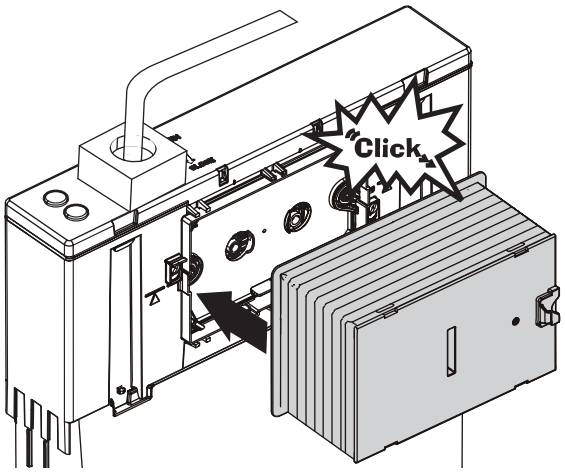
"Click"

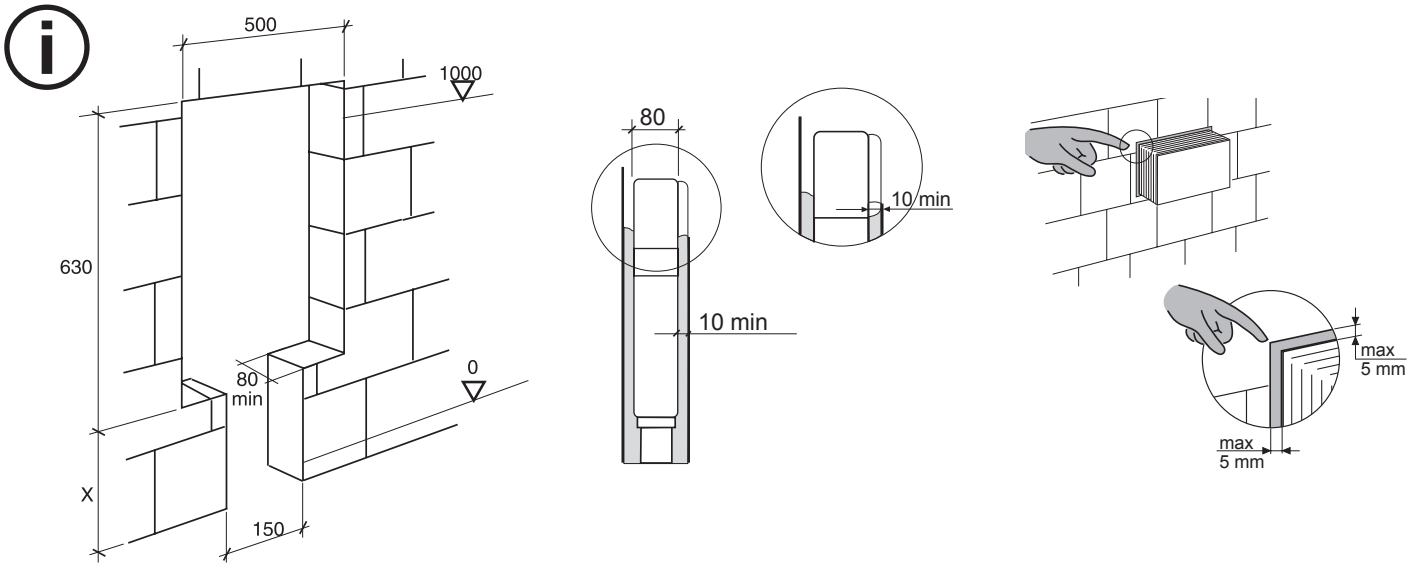
500
1000
630
80
min
0
X
150
80
10 min
10 min
max
5 mm
max
5 mm

6

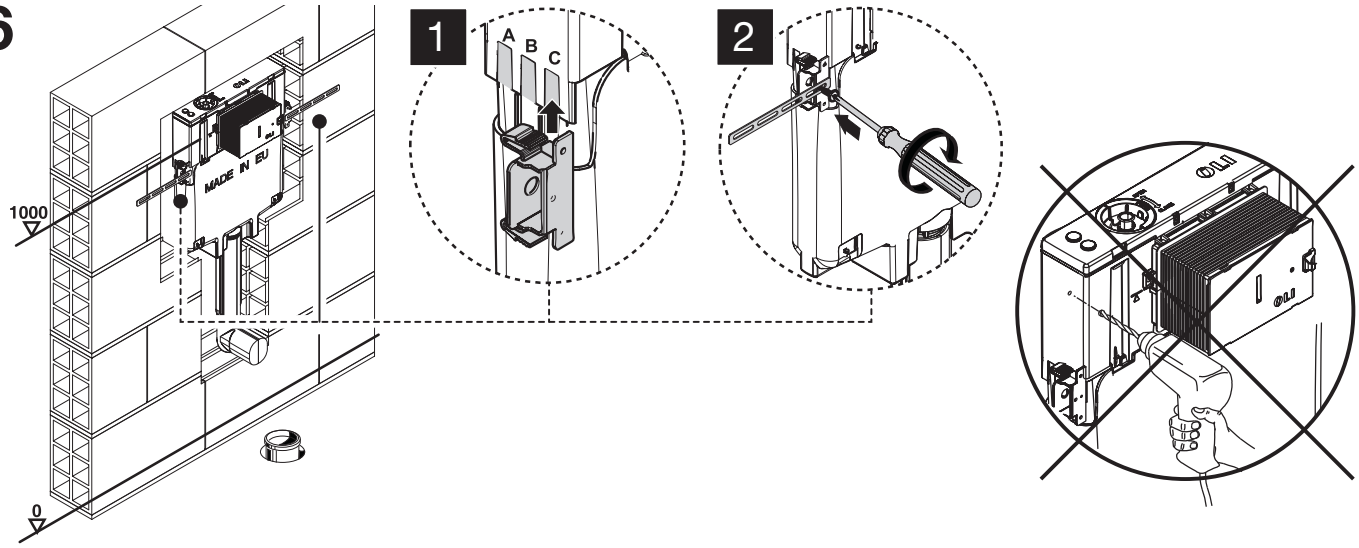
1000
0
MADE IN EU
1
A
B
C
2

7

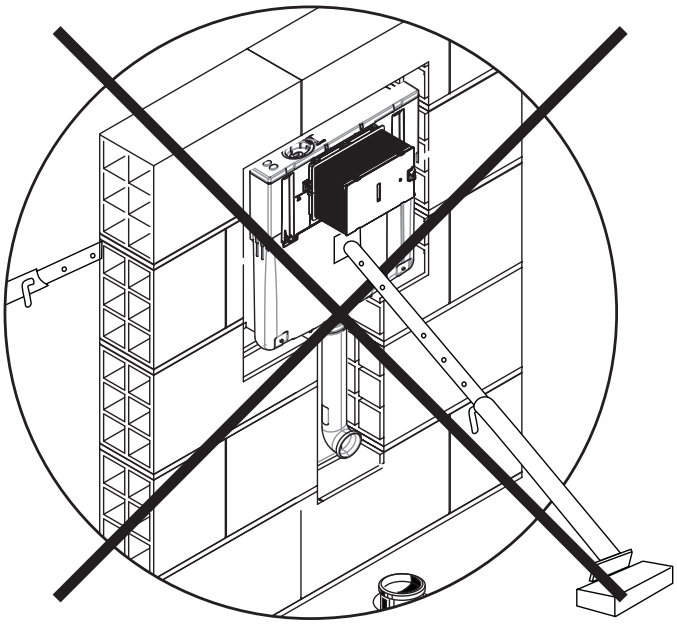

8

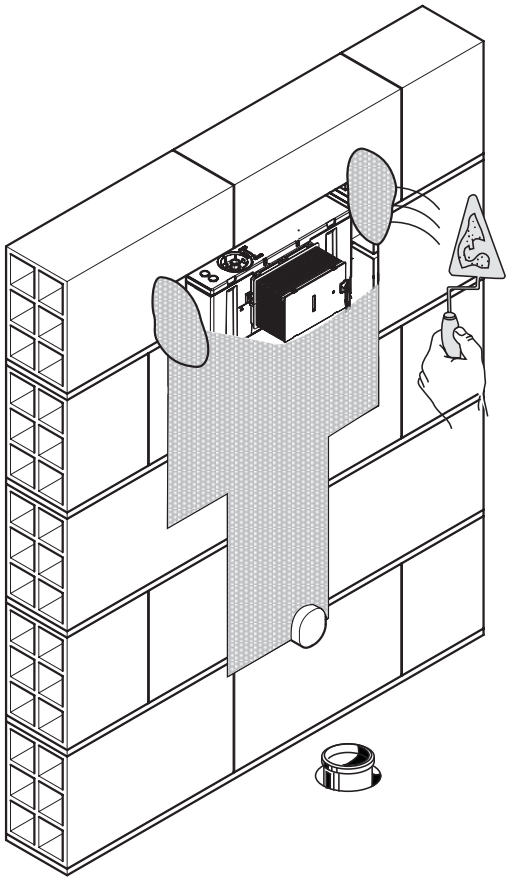

9

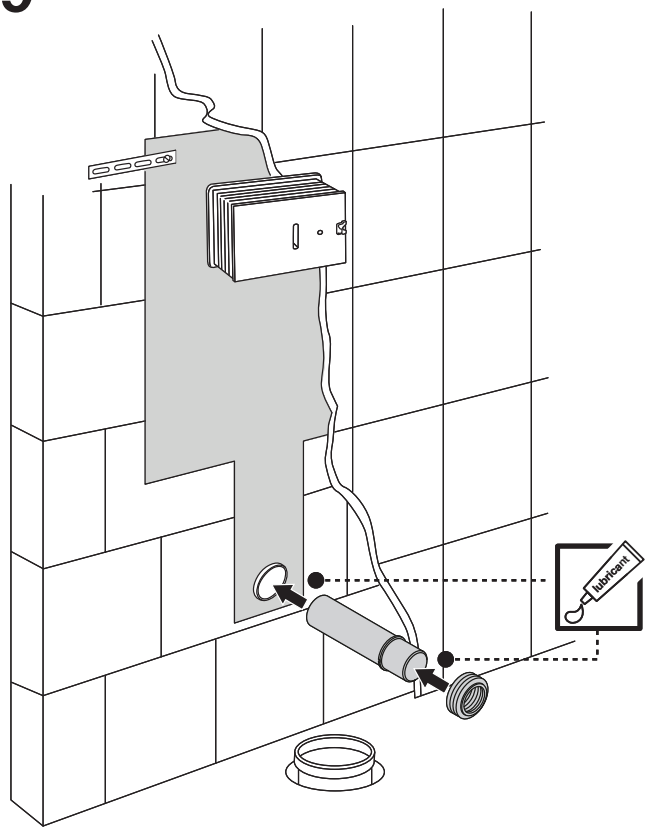

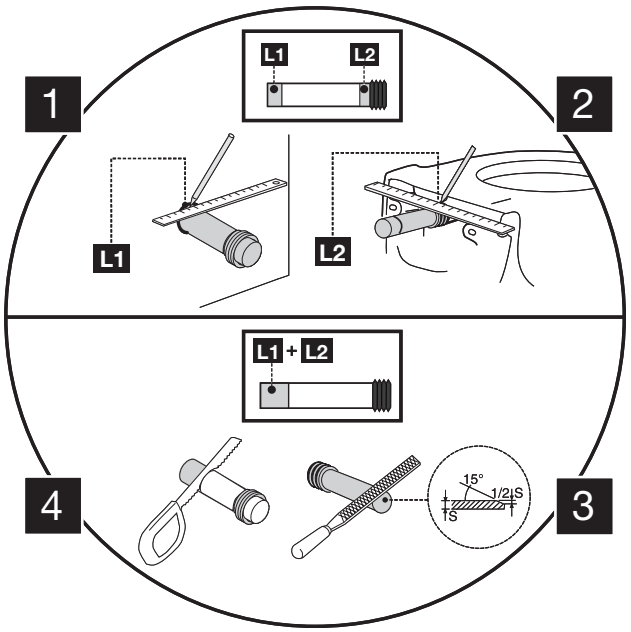

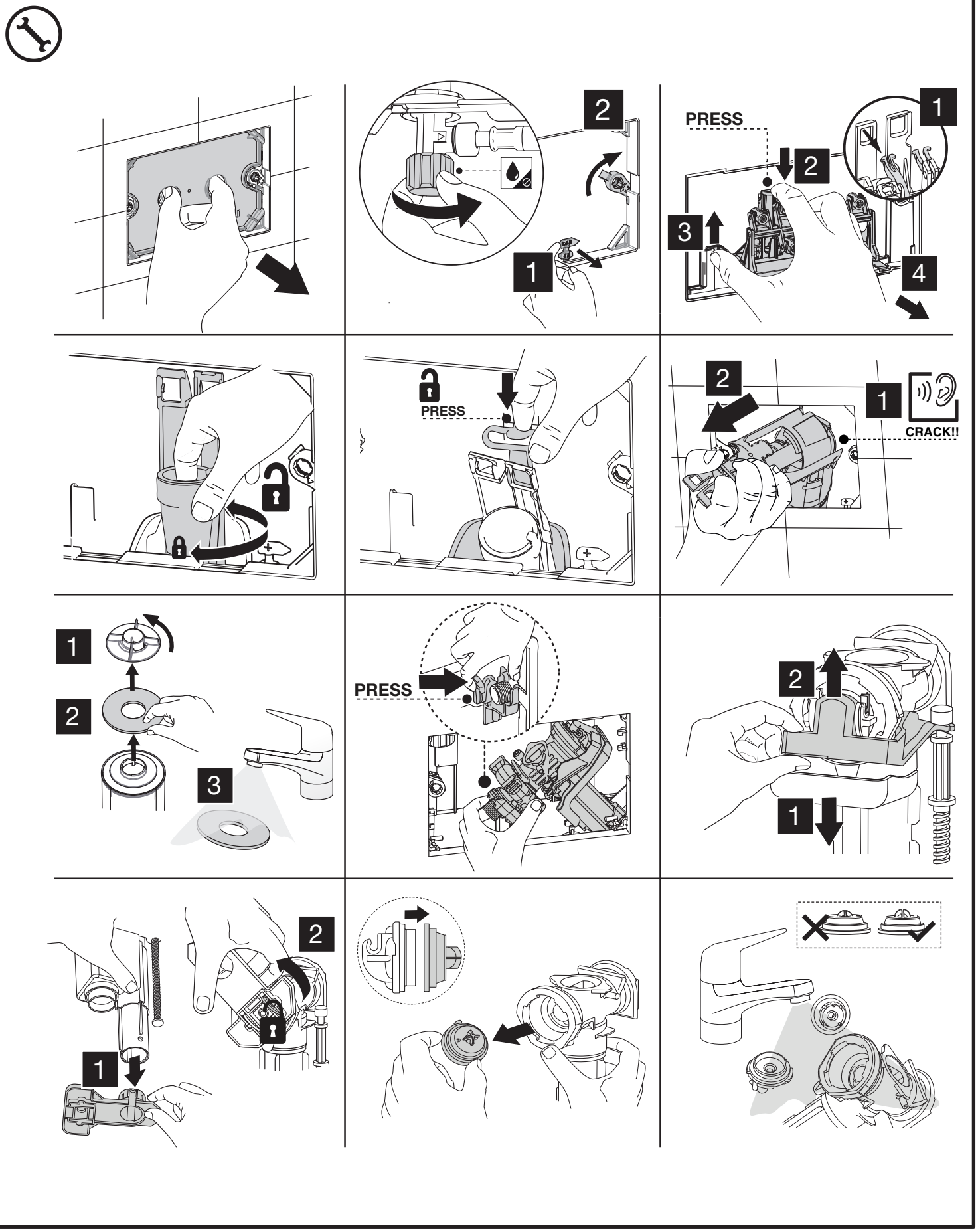

www.oli-world.com

comercial@oli-world.com | info@olisrl.it