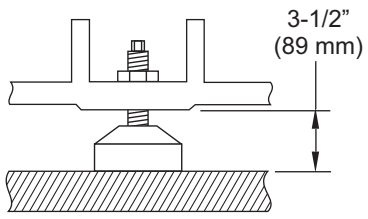

6X Leveling Pad Pin Dimension

① Electrical Connection

② Air Connection

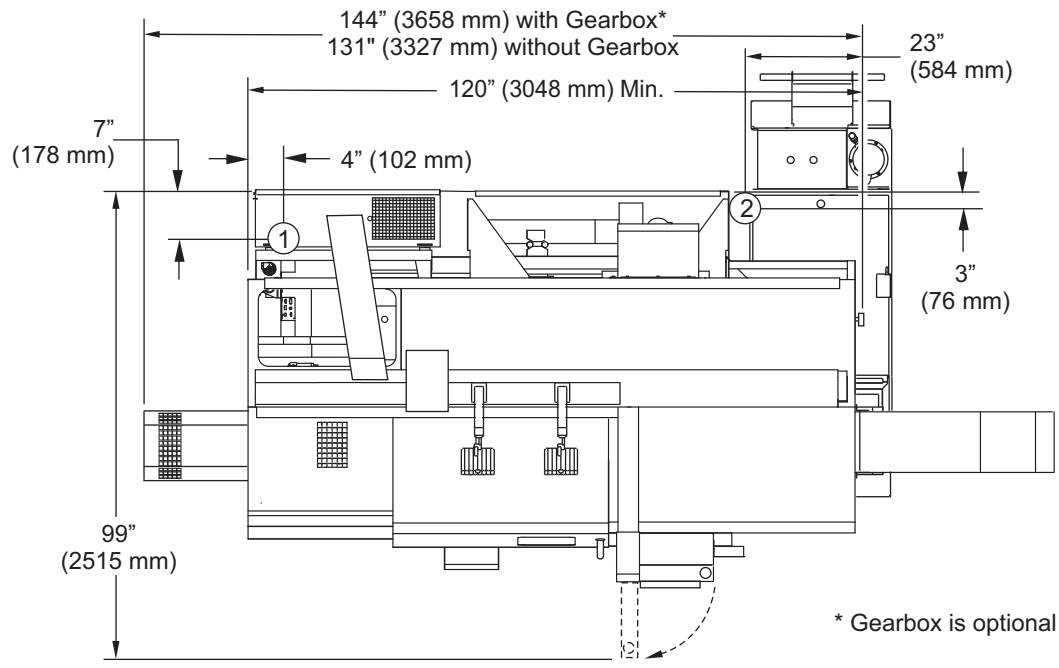

* Gearbox is optional on ST-30/35

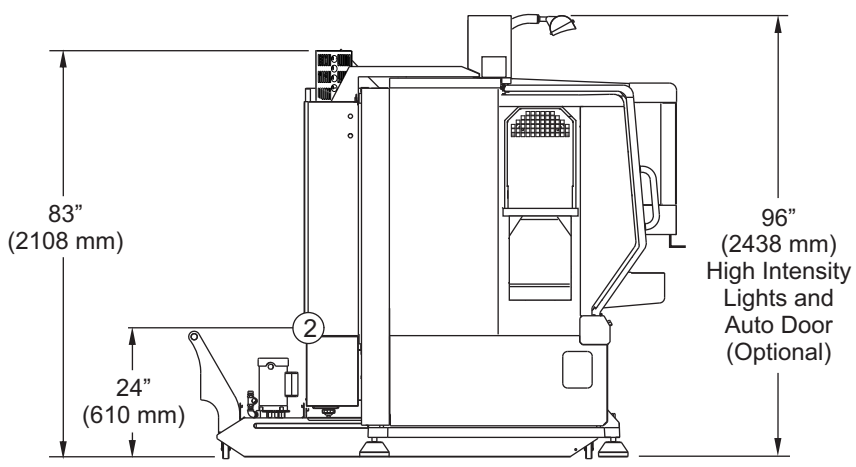

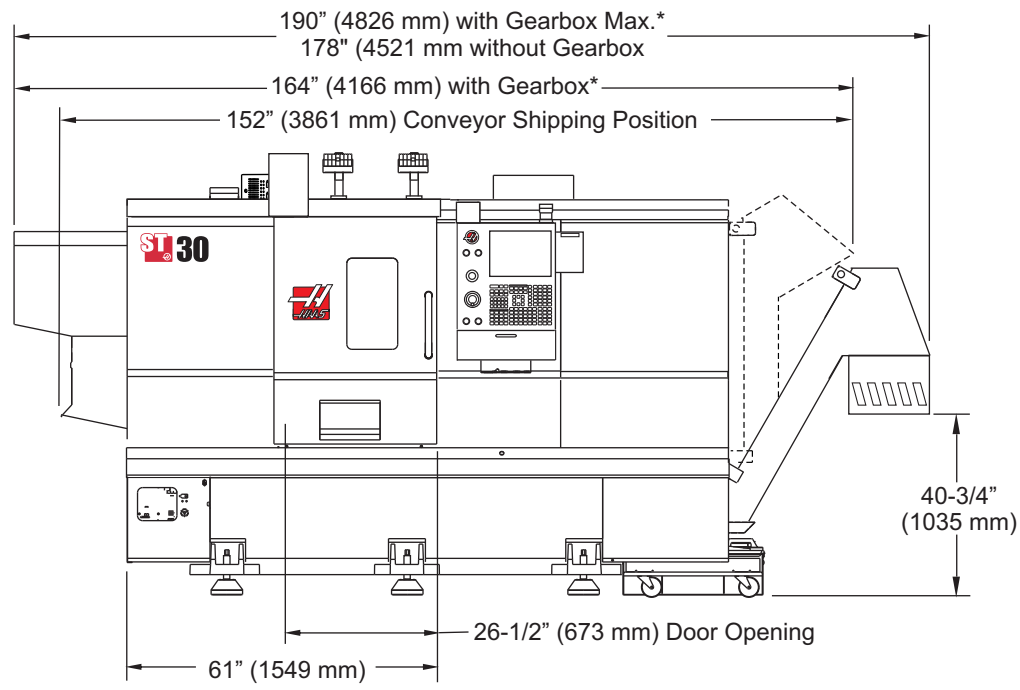

Minimum distance required to remove conveyor from lathe 134" (3404 mm).

Minimum distance required to remove conveyor from lathe 88" (2235 mm) when conveyor is folded at 90 degrees and folded down as it is pulled out.

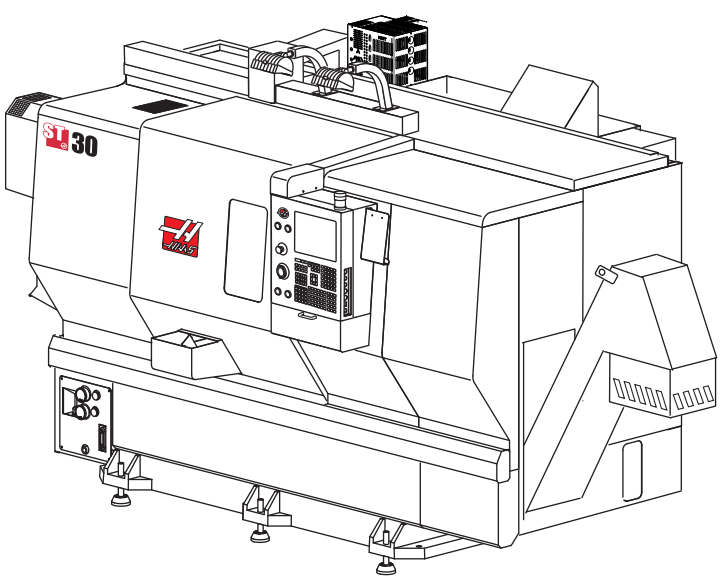

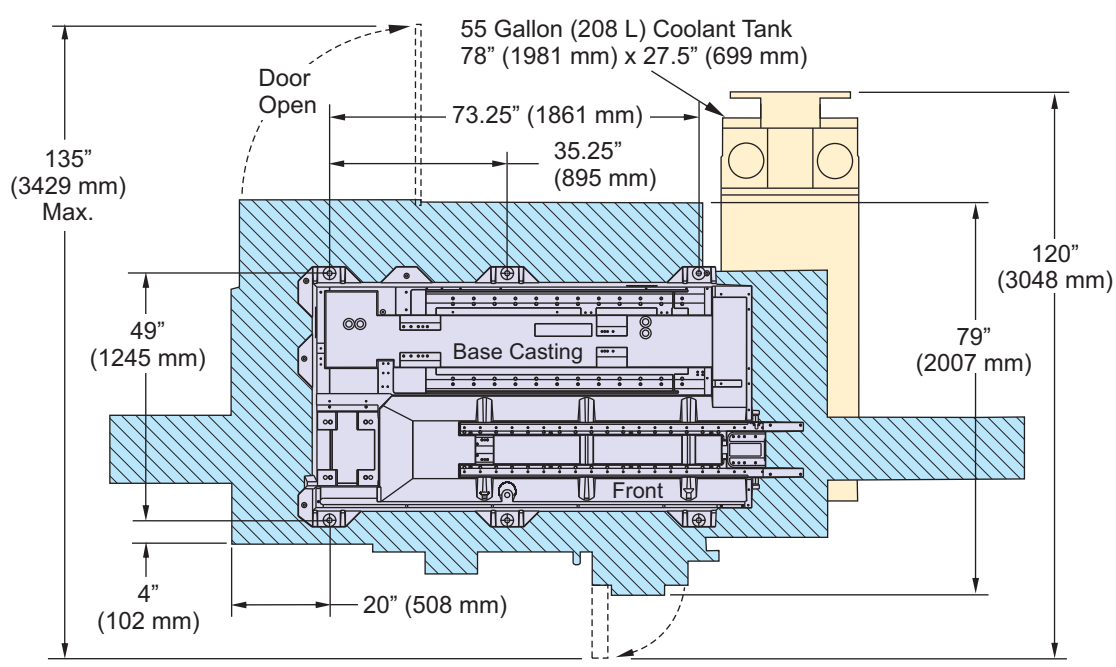

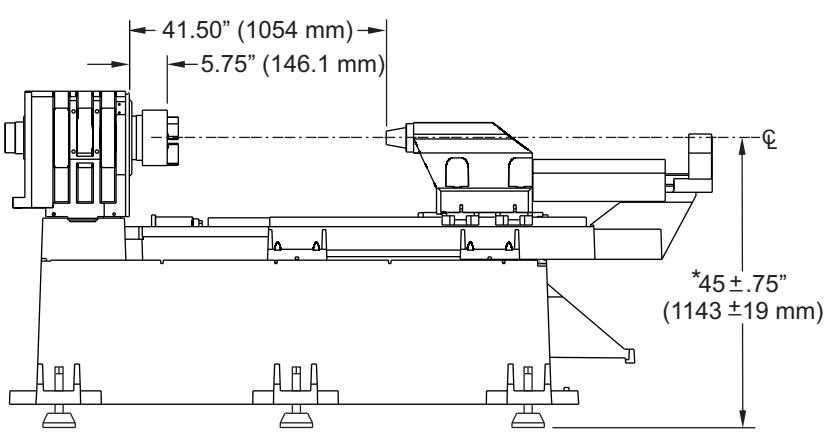

*Spindle center heights from floor, may vary due to leveling screw adjustments.

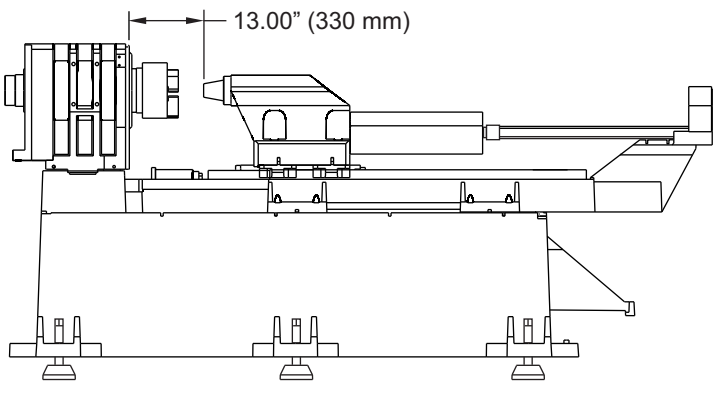

ST-30/35 Tailstock Travel
#4 Morse Taper

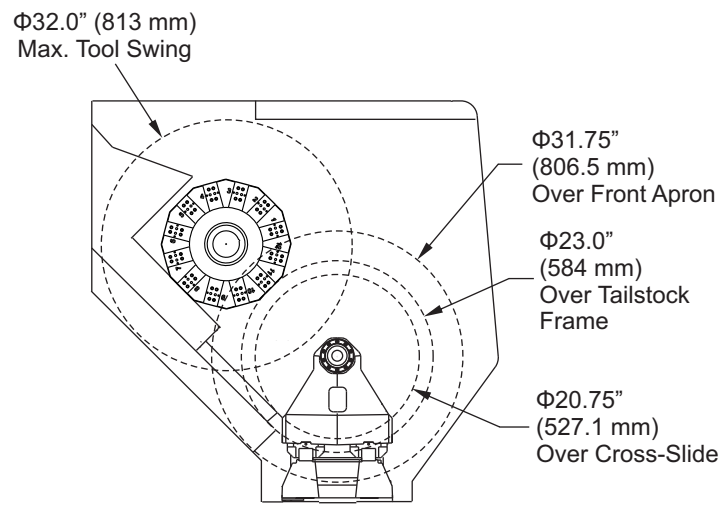

ST-30/35 Tool Swing Envelope
Turret at Home Position
12-Station BOT Turret Standard

Drawing Not to Scale

Note: Drawing is formatted for 11" x 17".
Drawing will print to 8.5" x 11".

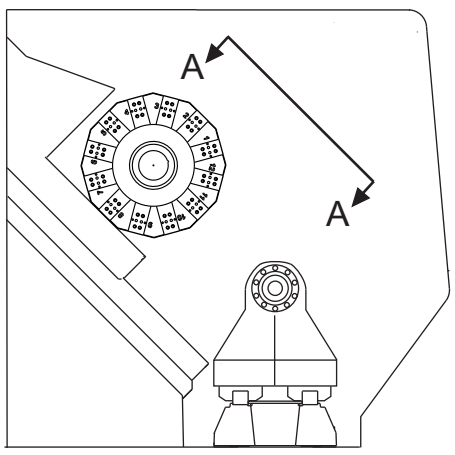

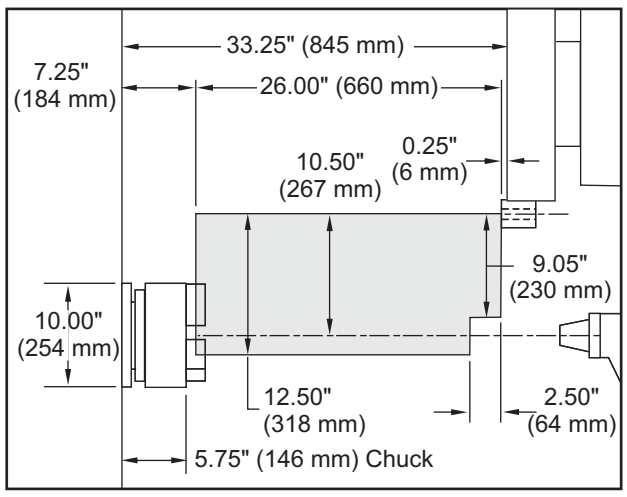

BOT ID

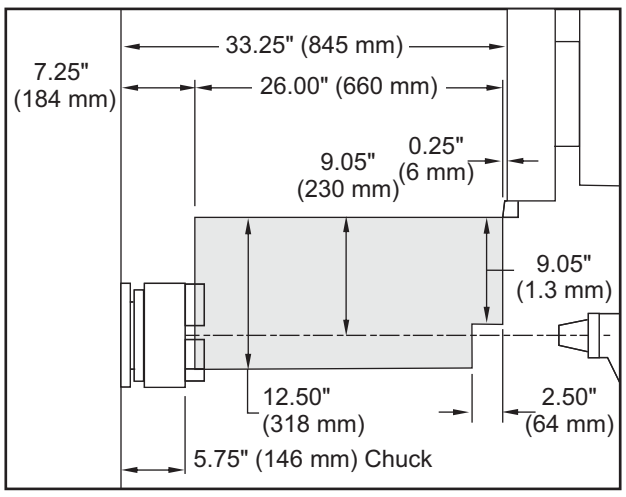

VB12 OD

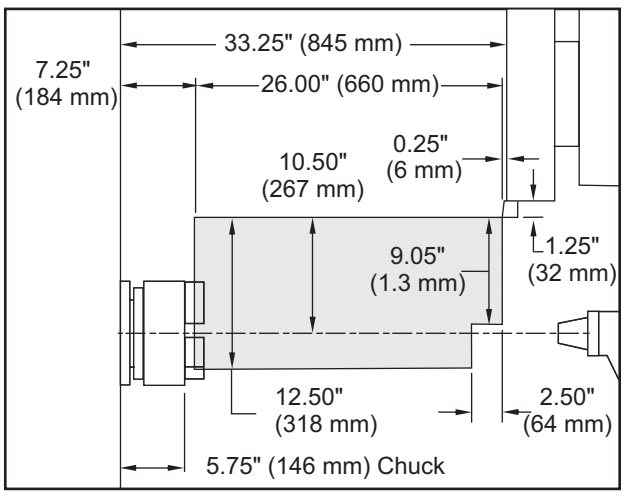

BOT OD

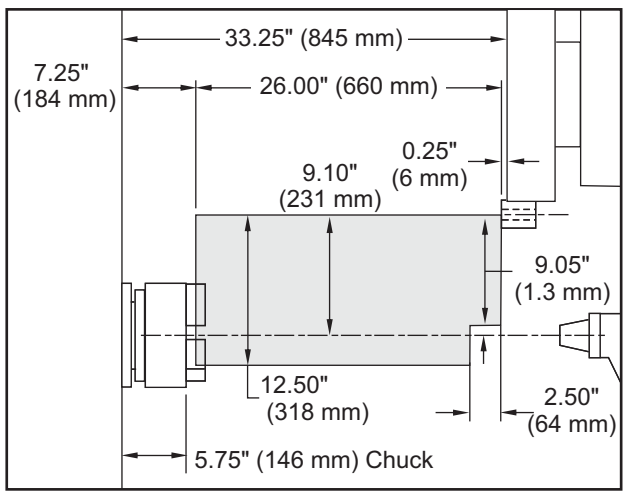

VB12 BOT ID

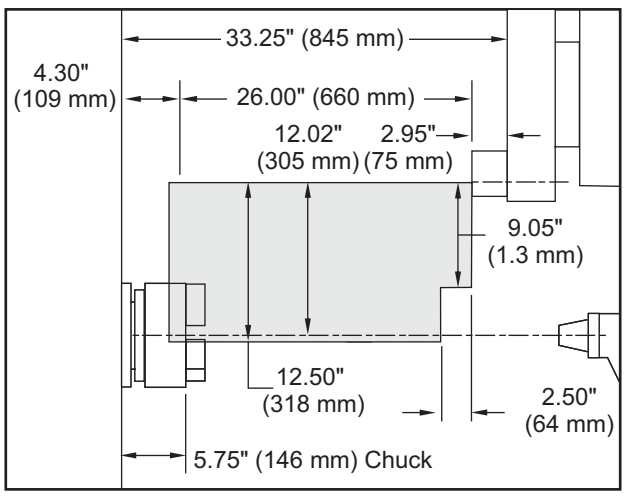

VDI ID, VB12 VDI ID

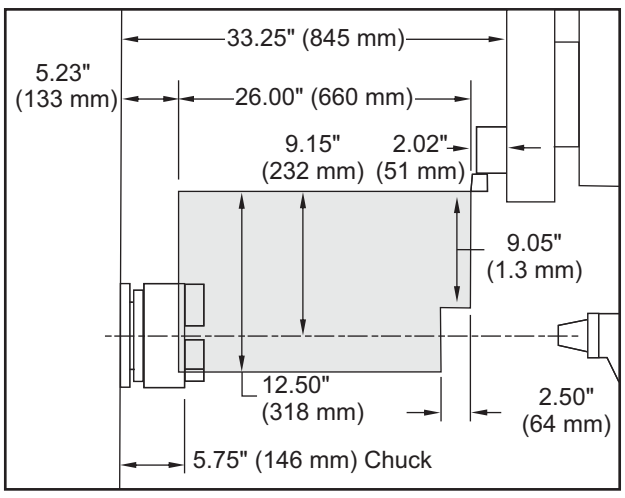

VDI OD, VB12 VDI OD

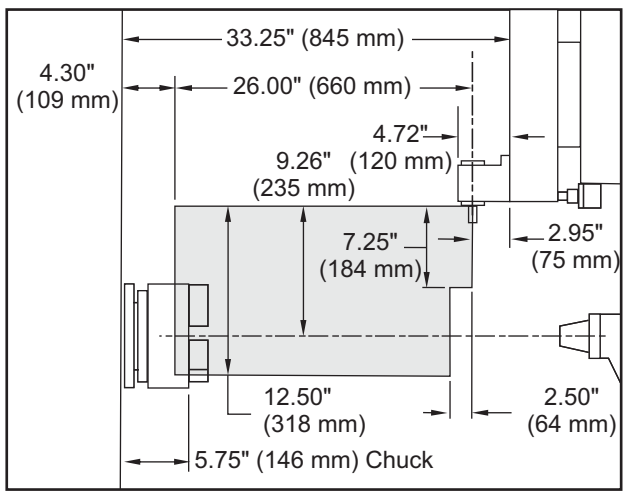

LIVE RADIAL TOOL

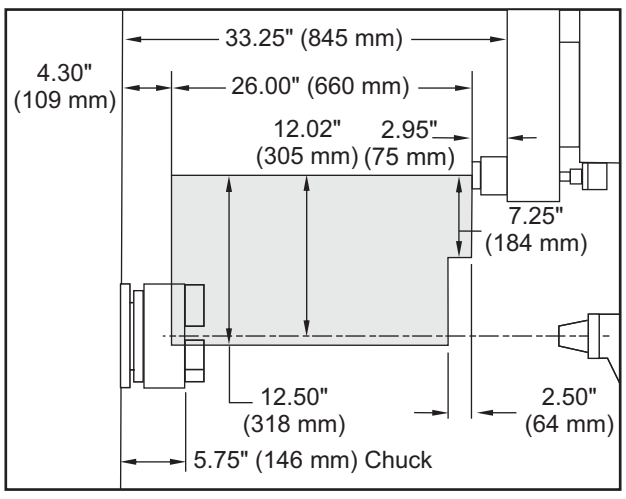

LIVE AXIAL TOOL

View A-A ST-30/35 Cut Envelope Diagrams

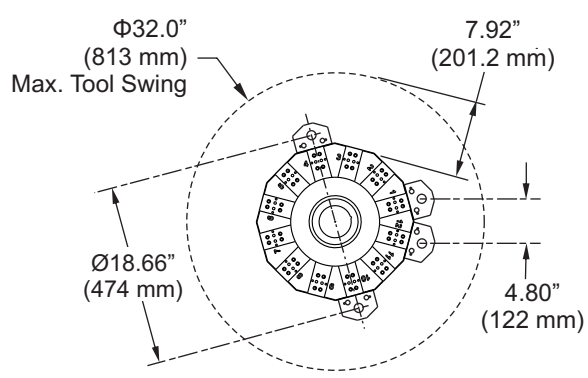

12-Station BOT Turret Standard

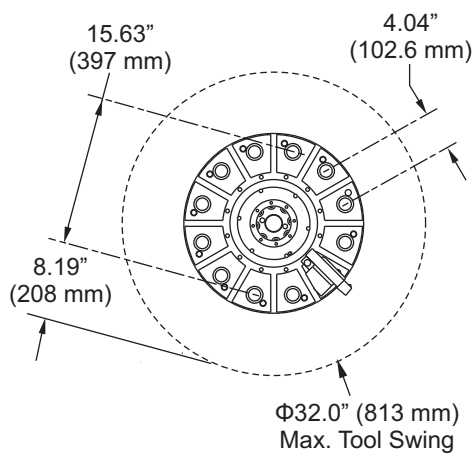

12-Station VDI Turret Option

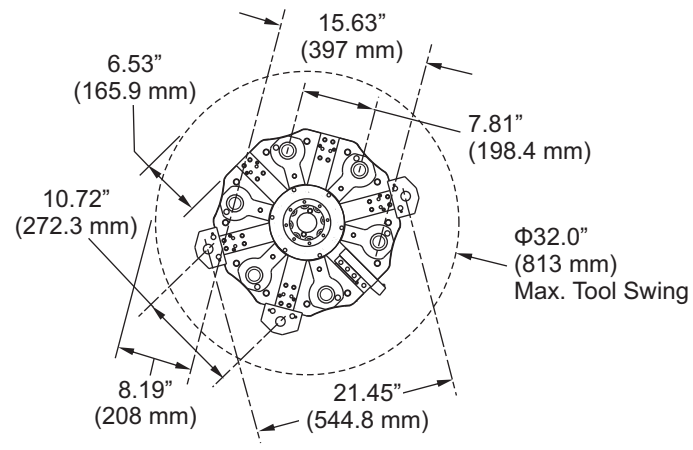

12-Station Hybrid VB12 Turret Option

ST-30/35 Tool Interference Drawings

Drawing Not to Scale

Note: Drawing is formatted for 11" x 17".
Drawing will print to 8.5" x 11".