WPT/K 250C CHAIR SCALE

Release date: 06.12.2013

Chair scales is a precise weighing instruments designed for weighing patients in sitting position in health care facilities and hospitals.
The scale features casters for fast and easy transporting the scale to its operation place.

The scale is equipped with an indicator PUEC/31 series comprising a backlit LCD display and 5-button keyboard for simple operation of basic scale functions.
The chair scale is powered from mains and accumulators, enabling scale operation independently on power supply conditions.

Basic functions of a chair scale:
- arring in all measuring range,
- temporary shutdown,
- adjustable filtering of measuring result.

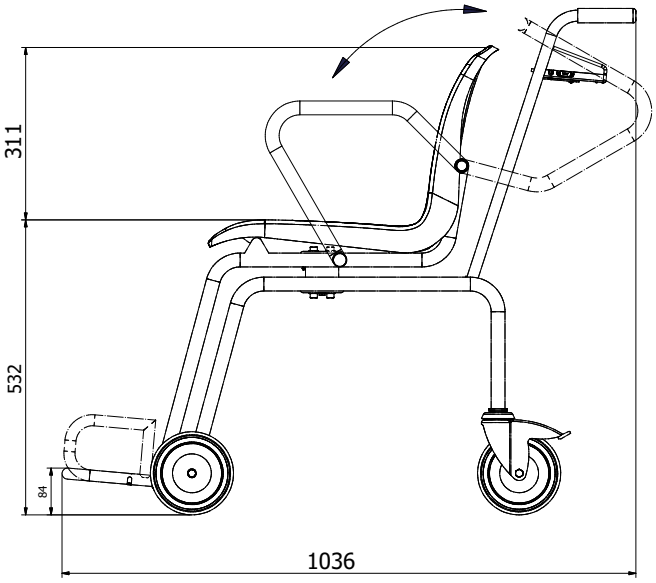

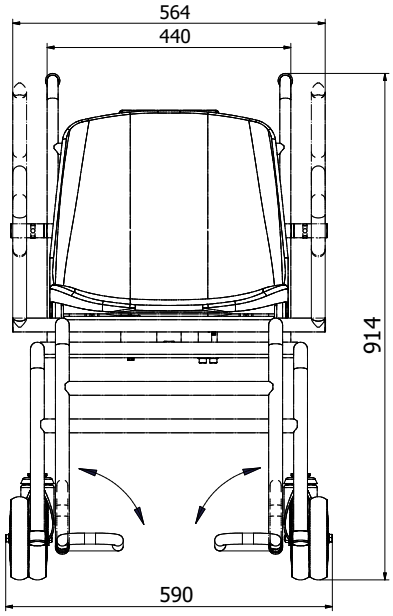

Technical data:

	WPT/K 250C
Max capacity	250 kg
Readability	100 g
Tare range	-250 kg
Working temperature	0° - +40 °C
Output signal	RS 232
Power supply	100 ÷ 240 V AC 50 ÷ 60 Hz / 12 V DC and 6×AA NiMH accumulator
Display	LCD (backlit)

Additional equipment:

EPSON TM-T20II THERMAL PRINTER
COMPUTER SOFTWARE: PW-WIN, RAD-KEY 2000

RADWAG Balances & Scales
26-600 Radom • 28 Bracka Street • POLAND • Phone: +48 48 3848800 • Fax: +48 48 3850010 • www.radwag.com • e-mail:export@radwag.com