NICOTRA | Gebhardt

SAIR

ELETTROVENTILATORI CENTRIFUGHI
A SEMPLICE ASPIRAZIONE
DIRETTAMENTE ACCOPPIATI

DIRECT DRIVEN SINGLE INLET
CENTRIFUGAL FANS

CATALOGO PROVVISORIO - APRILE 2003
DRAFT CATALOGUE - APRIL 2003

fan|tastic solutions

GAMMA E CODICI

RANGE AND PART NUMBERS

MOT. 92	120/62 LG	S50251		
	140/59 LG	S50249	S50250	S50262
	160/52 LG	S50252		
	160/62 LG	S50254	S50256	
	180/74 LG	S50255	S50257	
	180/92 LG	S50258		
	9/4 RD	624500		

Informazioni:

Regolazione della velocità

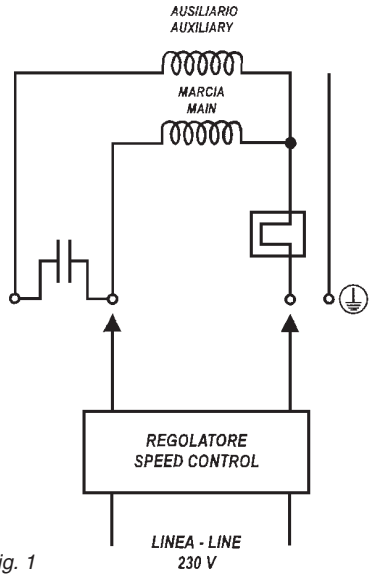

Fig. 1

A) Motori a più velocità:

Generalmente a tre velocità (disponibili alla morsettiera) che l'utente può selezionare con un commutatore, seguendo lo schema di collegamento in dotazione a tutti gli elettroventilatori.

Questi motori:

- ***"Non permettono":*** ulteriori regolazioni mediante regolatori elettronici a triac o convertitori statici di frequenza.
- ***"Permettono":*** invece l'uso di trasformatori o di dispositivi che non modifichino la forma d'onda sinusoidale di alimentazione.

Attenzione!!

Collegando più ventilatori in parallelo si può generare il rischio di avere correnti circolanti tra gli avvolgimenti, provocando così la bruciatura dei motori.
Si consiglia di verificare eventuali possibilità alternative esistenti.

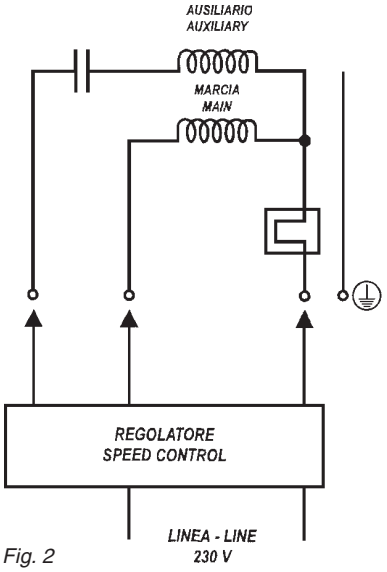

Fig. 2

B) Motori a una velocità:

La regolazione è possibile mediante:

- **Trasformatore:** Tutti i motori " monofase e trifase " della serie SAIR sono adatti a tale utilizzo, perché la forma d'onda sinusoidale non viene alterata.
- **Regolatori elettronici:** Le curve in sottoalimentazione riportate sul catalogo, ed eseguite con i nostri regolatori, sono ottenute preferendo un collegamento su entrambi le fasi, sia di marcia che ausiliaria fino a 3 Amp. max. (tipo a 2 fili, fig.1), e sulla sola fase di marcia, per assorbimenti superiori (tipo a 3 fili, fig.2);

Quanto sopra assicura il rispetto delle Direttive Comunitarie 73/23 CEE, 89/336 CEE, 93/69 CEE, sia sotto l'aspetto sicurezza che Compatibilità Elettromagnetica.

Si informa inoltre che non tutti i regolatori elettronici commerciali permettono un buon funzionamento del ventilatore a causa di una non buona compatibilità tra i vari componenti.

Tutti i nostri ventilatori sono forniti predisposti per eventuale collegamento a due fili.

Convertitori statici di frequenza (inverter)

I nostri motori non sono adatti a tale funzionamento.
Sono possibili invece esecuzioni speciali che permettono tale regolazione, purché i convertitori utilizzati rispettino la normativa di riferimento IEC 34-17; in questo caso si consiglia di interpellare il nostro ufficio tecnico.

Information:

Speed regulation

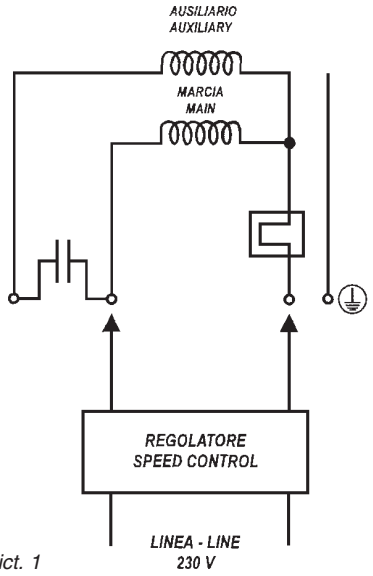

Pict. 1

A) Multi-speed motors

Speed regulation is obtained by switching the main feed to the appropriate motor speed tapping terminal in accordance with the wiring diagram supplied with the fan.

These motors:

- ***"Do not allow":***
  any further regulation by means of electric Triac regulators or frequency static converters;
- ***"allow":***
  The use of transformers or devices which do not modify the sinusoidal wave line.

Attention!!

By connecting fans in parallel there is a risk of eddy currents damaging motor windings.
Our Technical Services will be pleased to advise.

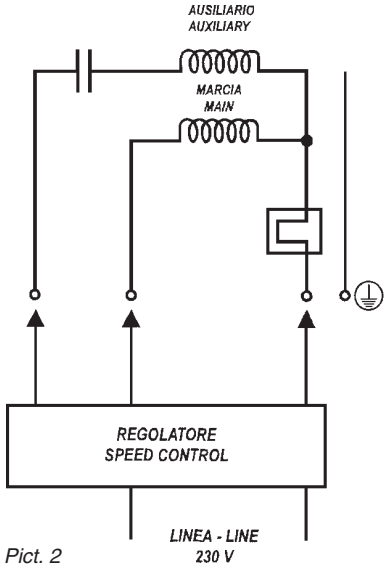

Pict. 2

B) One speed motors:

Regulation may be possible by means of:

- **Trasformer:**
  All single phase and three phase motors of SAIR series are suitable for this application because sinusoidal wave line is not altered.
- **Electronic regulators:**
  The low speed curves, shown in the catalogue, produced with Nicotra regulators, are obtained with a connection on both the main and auxiliary windings for motors up to 3 Amps. max. running currents (two wire control, see pict.1). For above 3 Amps. a three wire control is used (see pict. 2) with control on the main winding only.

This will comply with Community Directive 73/23 CEE, 89/336 CEE, 93/68 CEE, both for Safety and Electromagnetic Compatibility field.

Please note that not all commercially available electronic controllers are compatible with our fans. We recommendonly Nicotra approved controllers.

All our SAIR fans are supplied for two wires connection.

Frequency static converters:

Our standard motors are not suitable for this type of regulation.
Specially built motors may allow this regulation, on condition that used converters are built in accordance with IEC 34-17. Our Technical Services will be pleased to advise.

SAIR 120/62 - cod. S50251

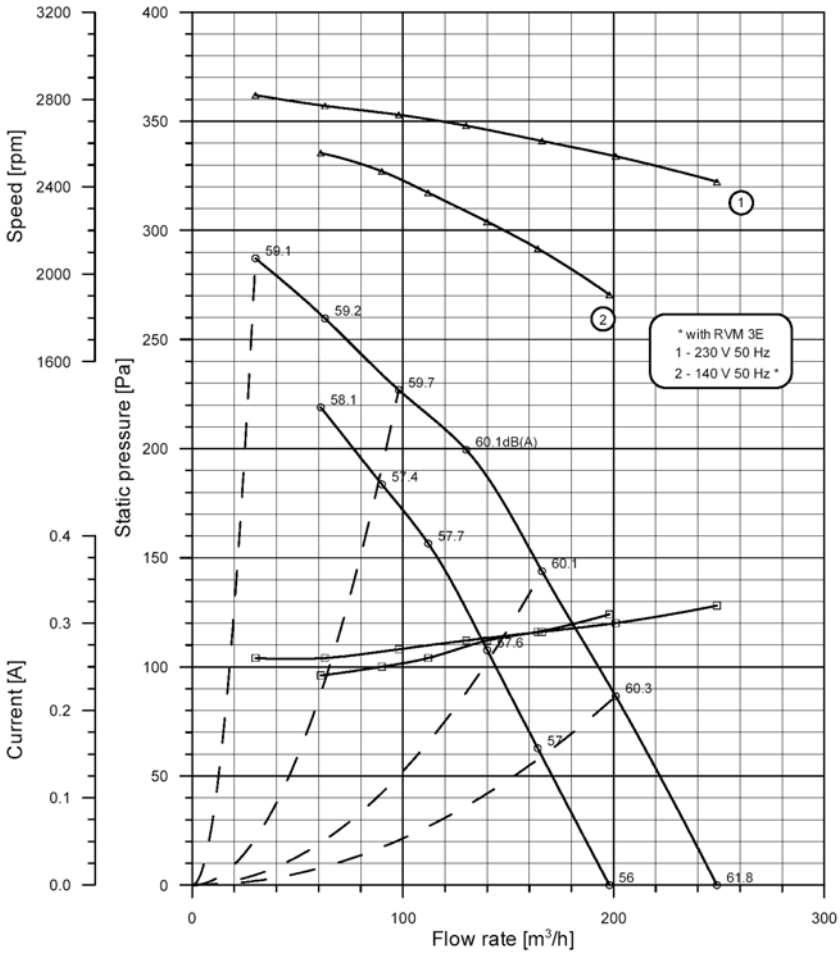

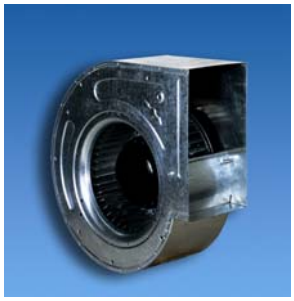

* The picture is only for display purposes of the range

Type:	SAIR 120/62
Motor:	S11C74
Test nr.:	S2198.*
Date:	21/11/02

Watt:	95 Ass	Amp Max:	0.32
Volt:	230 1~	Prot.:	IP 44
Hz:	50	T.H.:	YES-IN
Poles:	2	Ins. Cl.:	B
µF:	2 / 450 V		

Motor regulation: electronic

Air Density (γ): 1.20 kg/m³
Installation type : free inlet, free outlet
dB(A) free field noise measurements at 1 m

This test data obtained in a laboratory registered by AMCA, for AMCA 210/99 air performance testing.
Data is not certified by AMCA

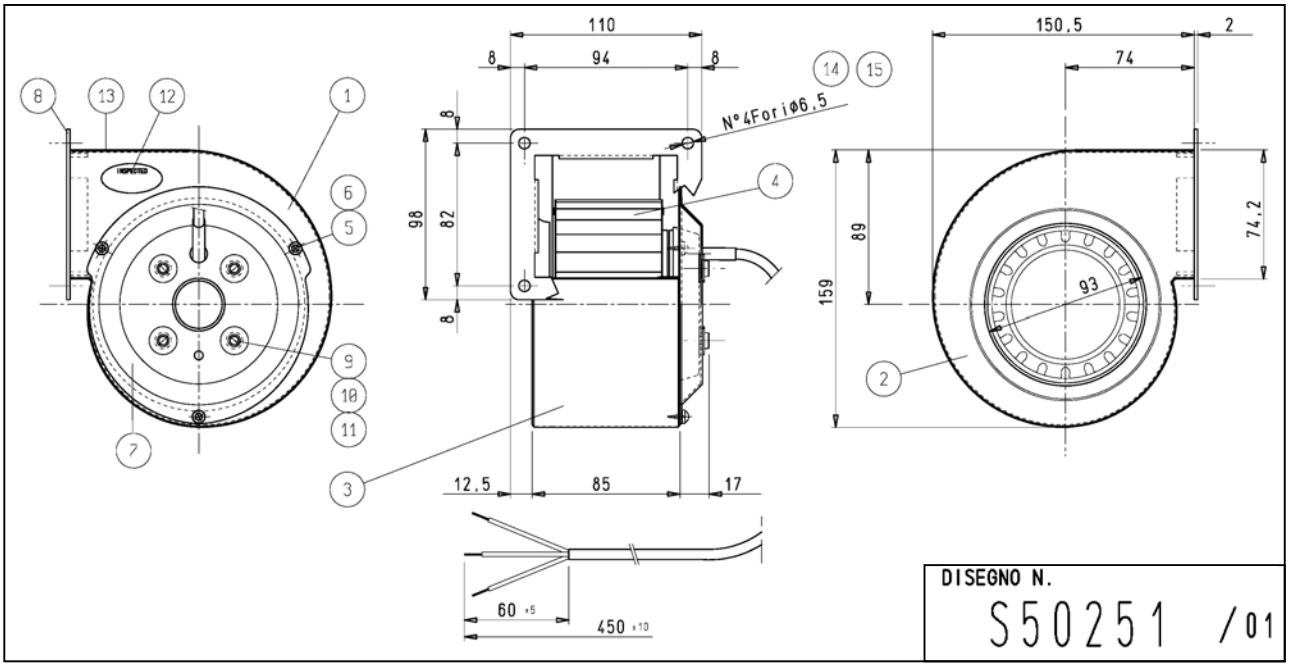

SAIR 140/59 - cod. S50249

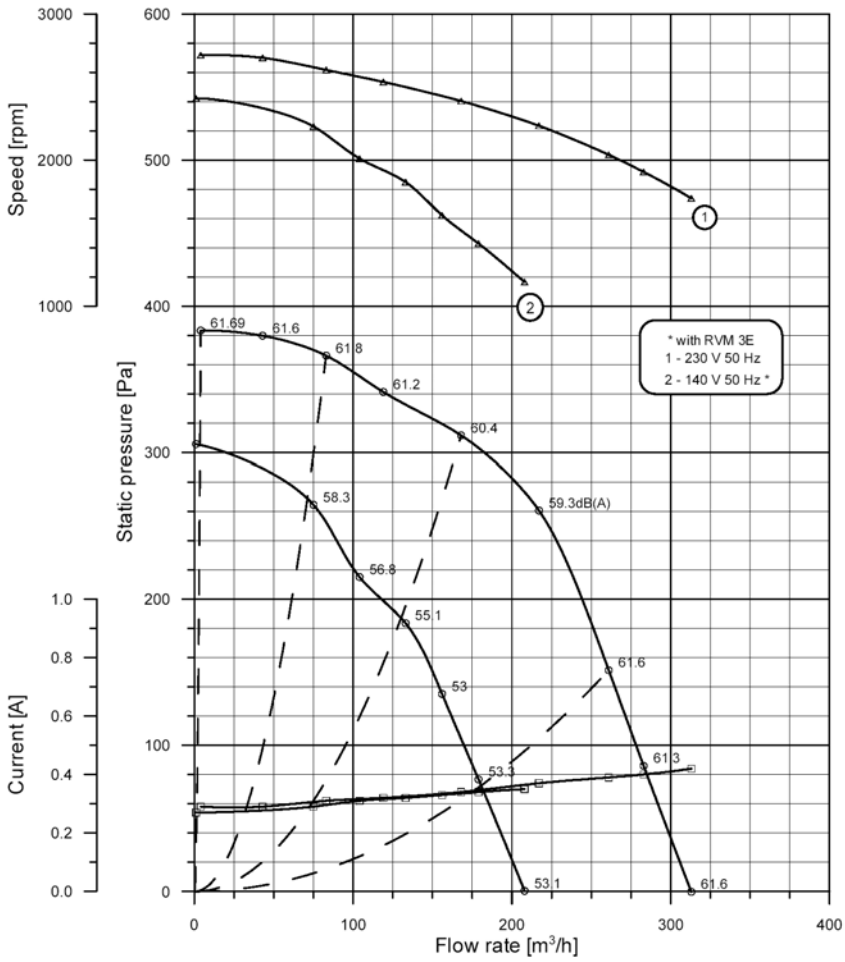

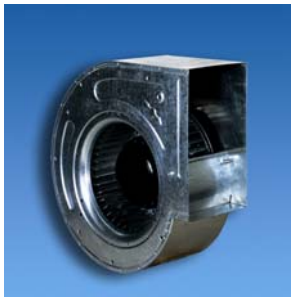

* The picture is only for display purposes of the range

Type:	SAIR 140/59
Motor:	S11C72
Test nr.:	S2191.*
Date:	13/11/02

Watt:	110 Ass	Amp Max:	0.42
Volt:	230 1~	Prot.:	IP 44
Hz:	50	T.H.:	YES-IN
Poles:	2	Ins. Cl.:	B
µF:	2 / 450 V		

Motor regulation: electronic

Air Density (γ): 1.20 kg/m³
Installation type : free inlet, free outlet
dB(A) free field noise measurements at 1 m

This test data obtained in a laboratory registered by AMCA, for AMCA 210/99 air performance testing.
Data is not certified by AMCA

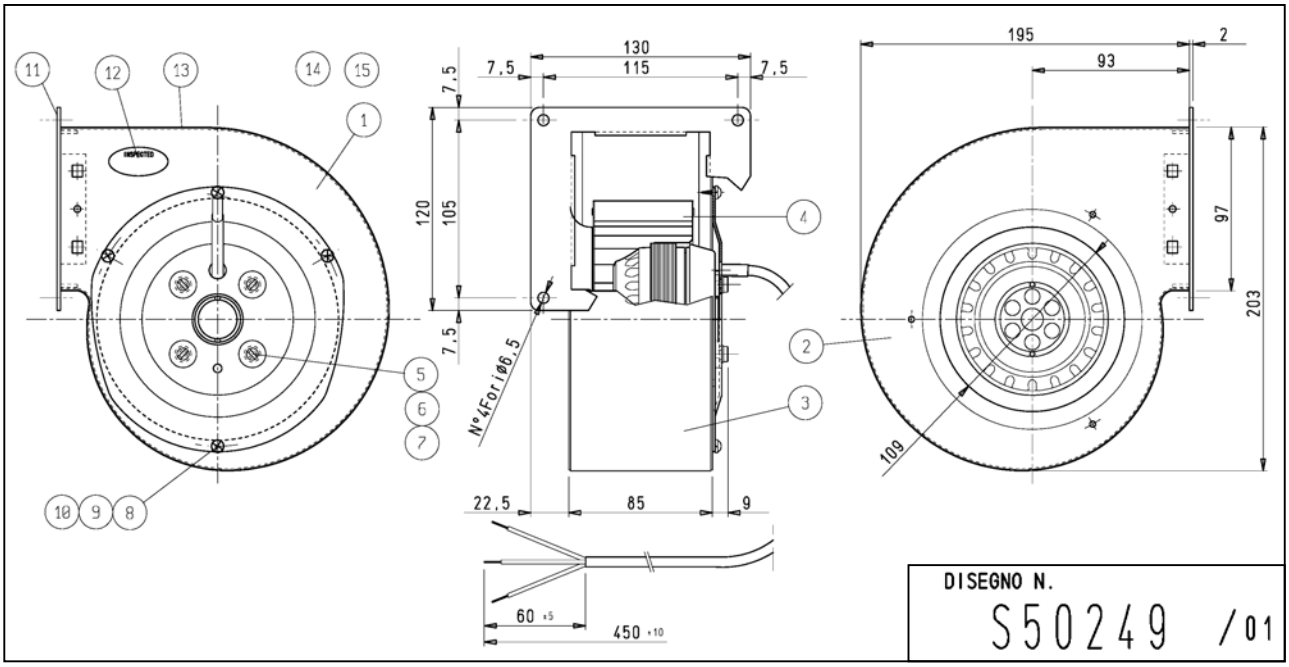

SAIR 140/59 - cod. S50250

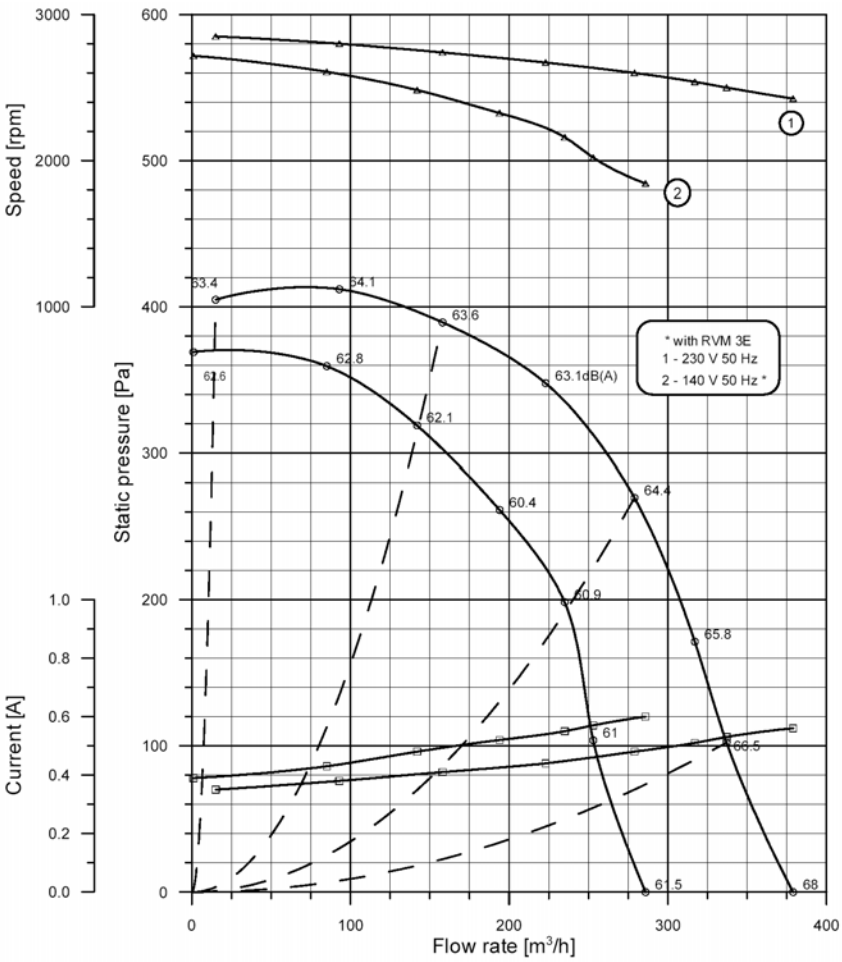

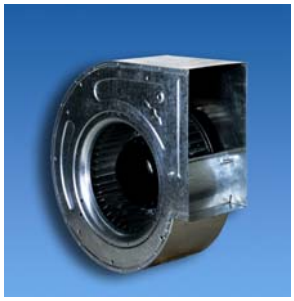

* The picture is only for display purposes of the range

Type:	SAIR 140/59
Motor:	S11C73
Test nr.:	S2189.*
Date:	12/11/02

Watt:	160 Ass	Amp Max:	0.56
Volt:	230 1~	Prot.:	IP 44
Hz:	50	T.H.:	YES-IN
Poles:	2	Ins. Cl.:	B
µF:	4 / 450 V		

Motor regulation: electronic

Air Density (γ): 1.20 kg/m³
Installation type : free inlet, free outlet
dB(A) free field noise measurements at 1 m

This test data obtained in a laboratory registered by AMCA, for AMCA 210/99 air performance testing.
Data is not certified by AMCA

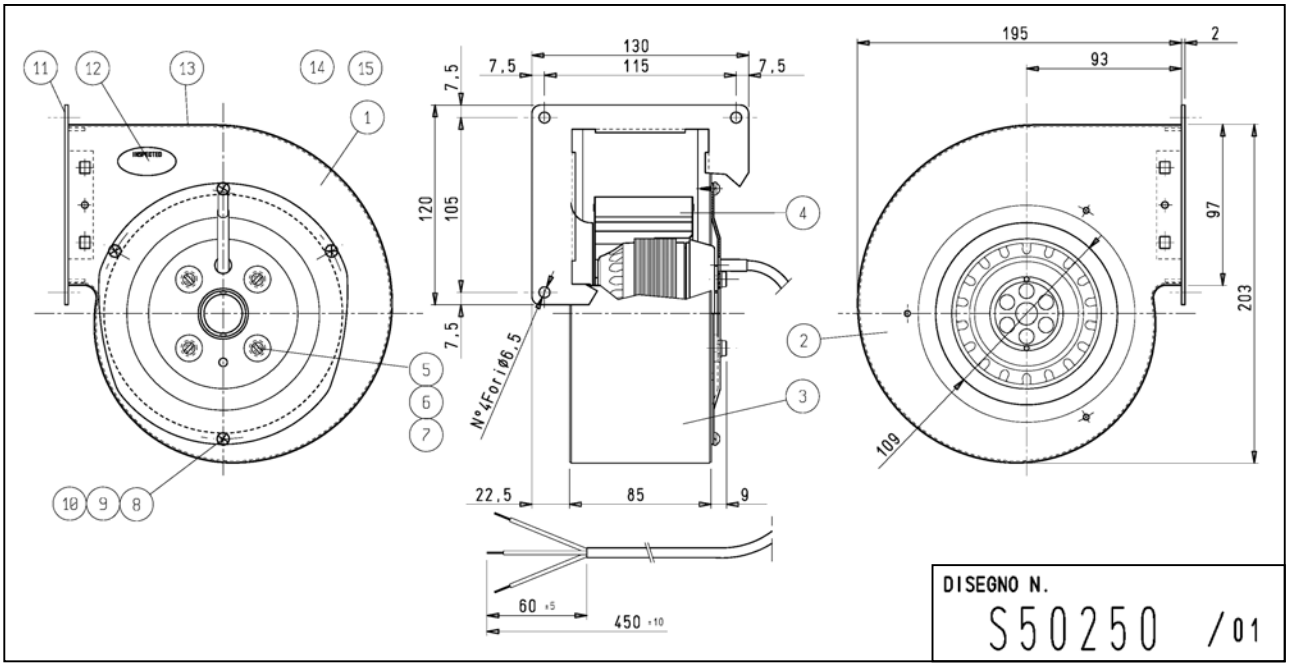

SAIR 140/59 SAE - cod. S50262

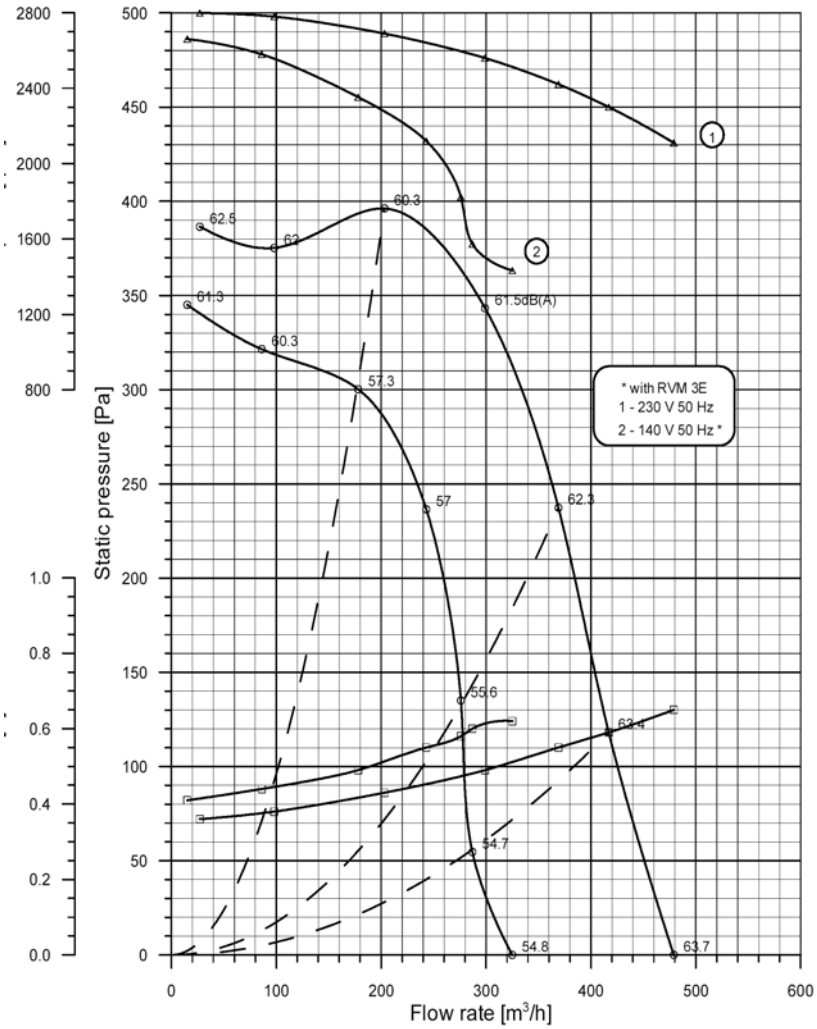

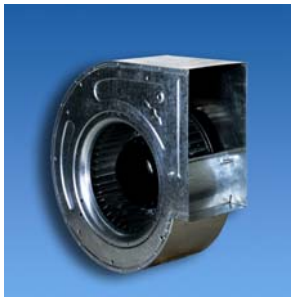

* The picture is only for display purposes of the range

Type:	SAIR 140/59 SAE
Motor:	S11C73
Test nr.:	S2211.*
Date:	03/12/02

Watt:	160 Ass.	Amp Max:	0.65
Volt:	230 1~	Prot.:	IP 44
Hz:	50	T.H.:	YES-IN
Poles:	2	Ins. Cl.:	B
µF:	4 / 450 V		

Motor regulation: electronic

Air Density (γ): 1.20 kg/m³
Installation type : free inlet, free outlet
dB(A) free field noise measurements at 1 m

This test data obtained in a laboratory registered by AMCA, for AMCA 210/99 air performance testing.
Data is not certified by AMCA

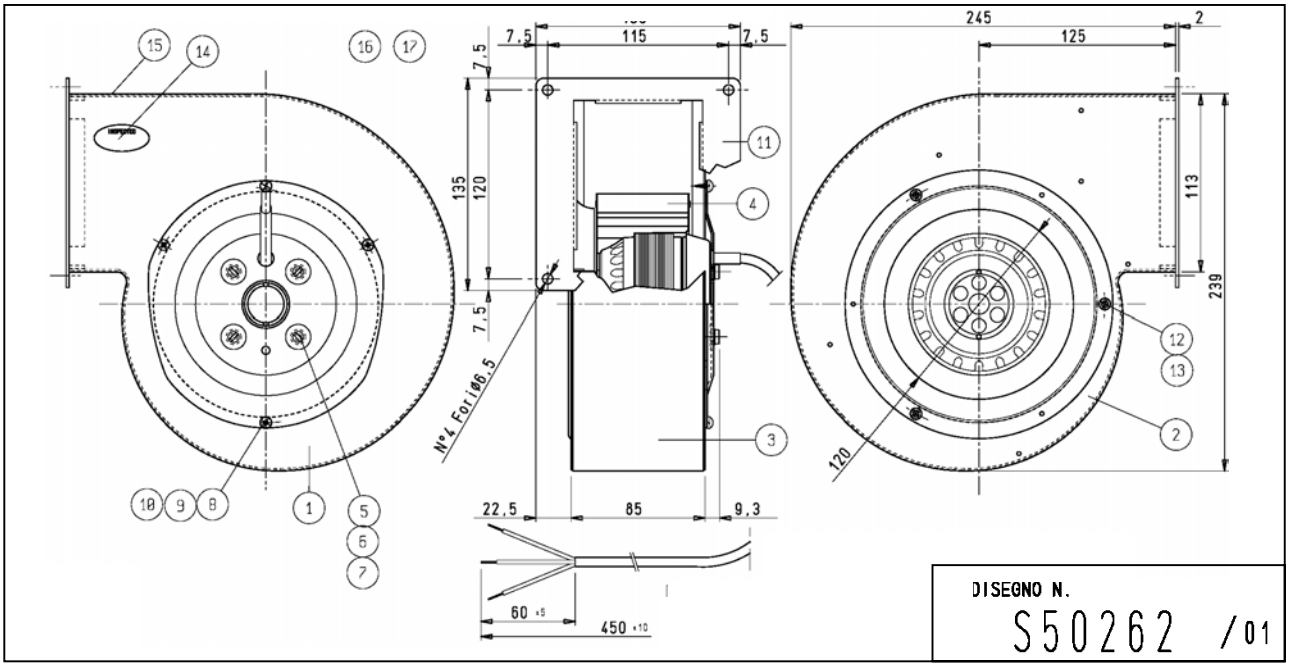

SAIR 160/52 - cod. S50252

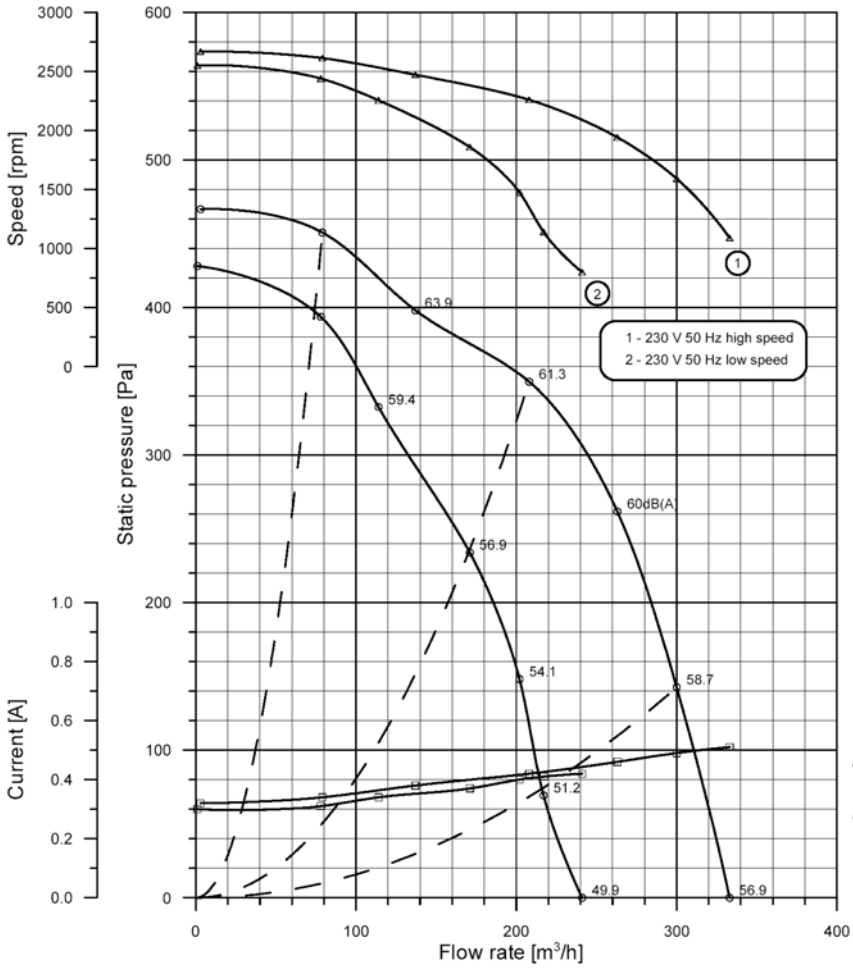

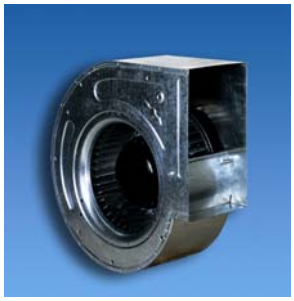

* The picture is only for display purposes of the range

Type:	SAIR 160/52
Motor:	S11C75
Test nr.:	S2244.*
Date:	20/01/03

Watt:	130 Ass	Amp Max:	0.5
Volt:	230 1~	Prot.:	IP 44
Hz:	50	T.H.:	YES-IN
Poles:	2	Ins. Cl.:	B
µF:	3.15 / 450 V		

Motor regulation: NO

Air Density (γ): 1.20 kg/m³
Installation type : free inlet, free outlet
dB(A) free field noise measurements at 1 m

This test data obtained in a laboratory registered by AMCA, for AMCA 210/99 air performance testing.
Data is not certified by AMCA

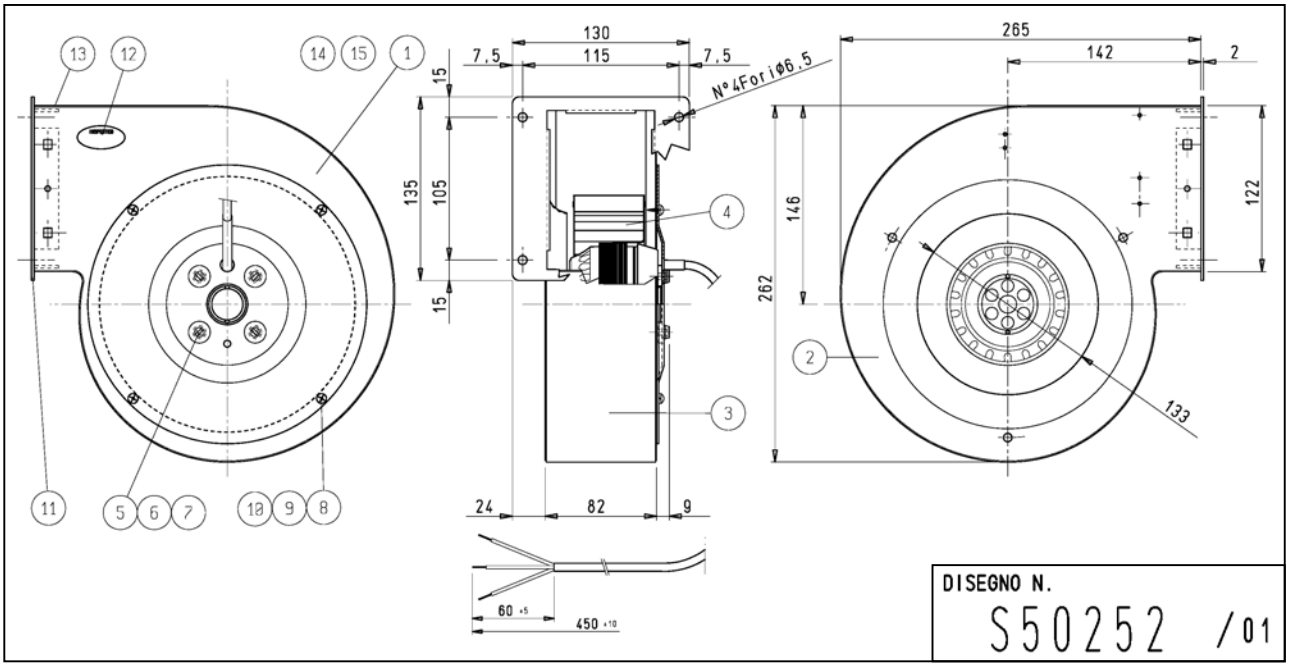

SAIR 160/62 - cod. S50254

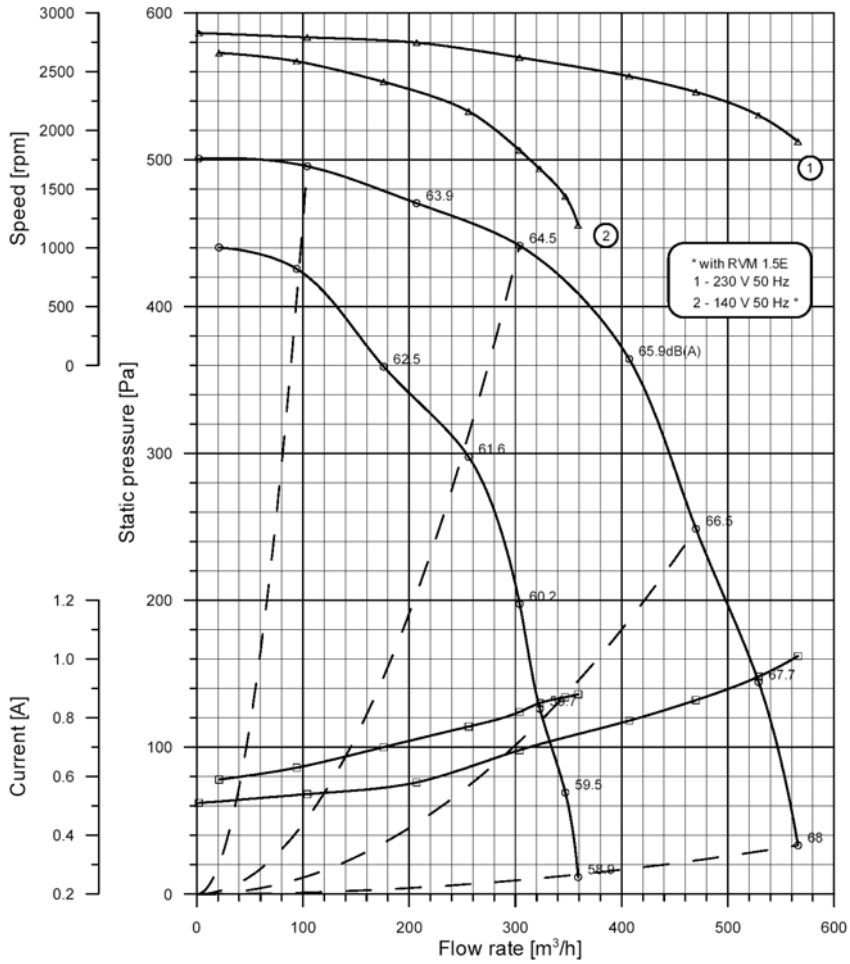

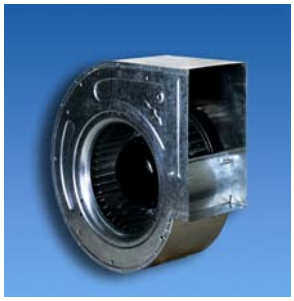

* The picture is only for display purposes of the range

Type:	SAIR 160/62
Motor:	S11C78
Test nr.:	S2234.*
Date:	14/01/03

Watt:	205 Ass	Amp Max:	1
Volt:	230 1~	Prot.:	IP 44
Hz:	50	T.H.:	YES-IN
Poles:	2	Ins. Cl.:	B
µF:	6 / 450 V		

Motor regulation: electronic

Air Density (γ): 1.20 kg/m³
Installation type : free inlet, free outlet
dB(A) free field noise measurements at 1 m

This test data obtained in a laboratory registered by AMCA, for AMCA 210/99 air performance testing.
Data is not certified by AMCA

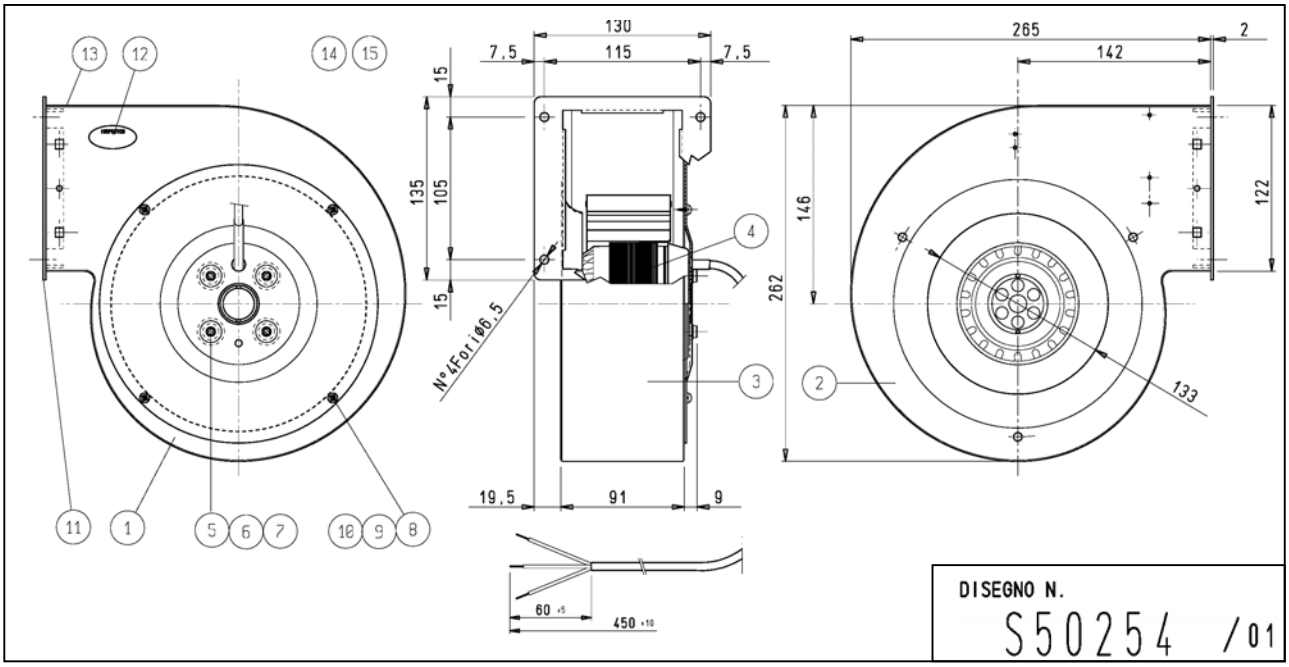

SAIR 160/62 - cod. S50256

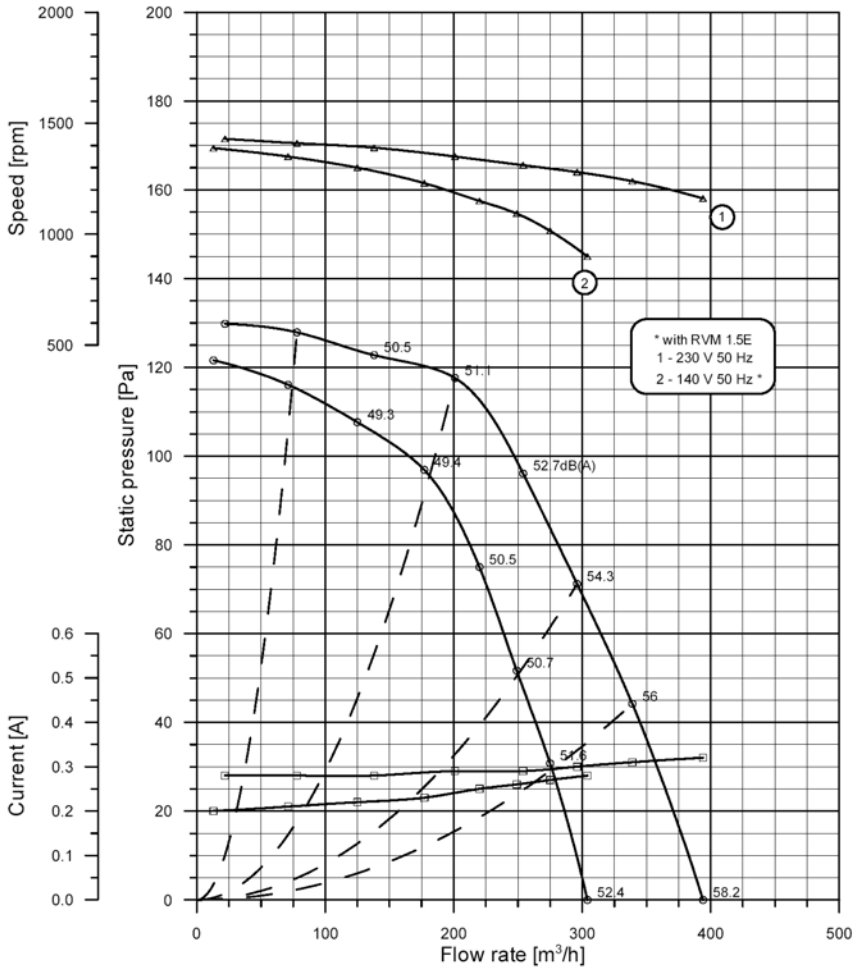

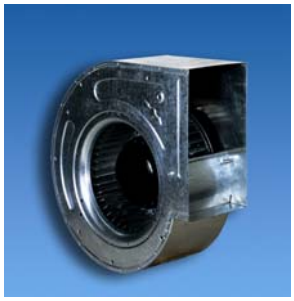

* The picture is only for display purposes of the range

Type:	SAIR 160/62
Motor:	S11C80
Test nr.:	S2245.*
Date:	23/01/03

Watt:	70 Ass	Amp Max:	0.32
Volt:	230 1~	Prot.:	IP 44
Hz:	50	T.H.:	YES-IN
Poles:	4	Ins. Cl.:	B
µF:	2 / 450 V		

Motor regulation: electronic

Air Density (γ): 1.20 kg/m³
Installation type : free inlet, free outlet
dB(A) free field noise measurements at 1 m

This test data obtained in a laboratory registered by AMCA, for AMCA 210/99 air performance testing.
Data is not certified by AMCA

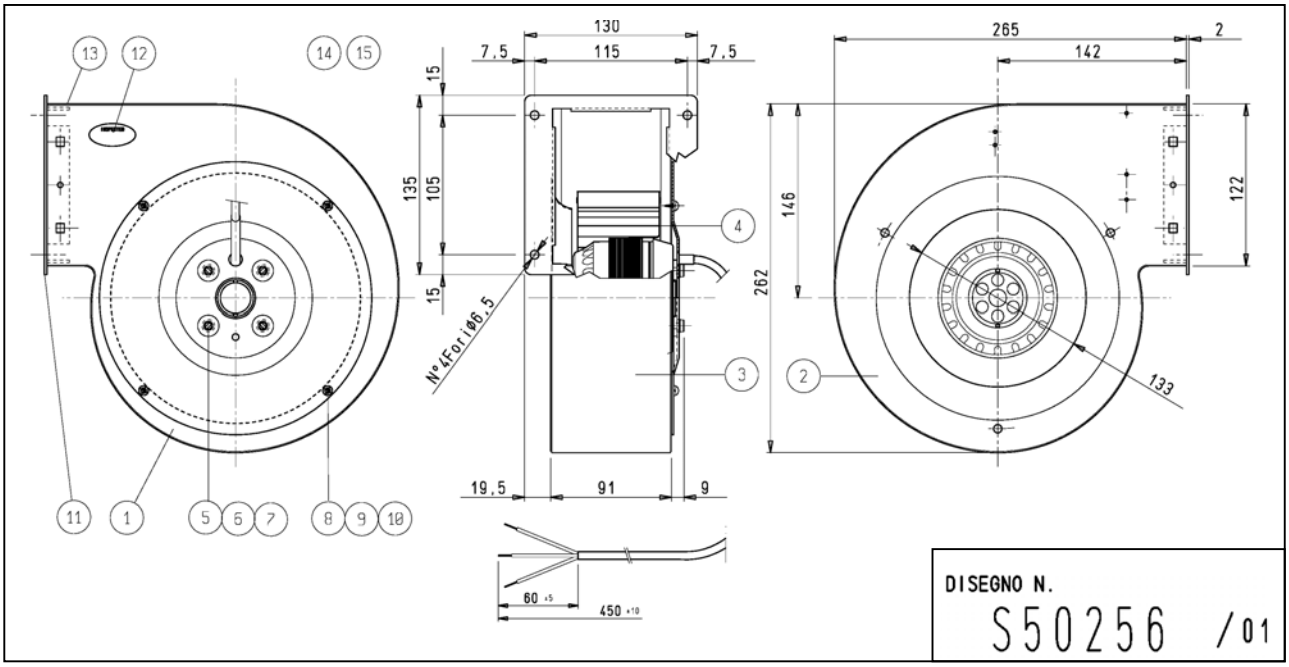

SAIR 180/74 - cod. S50255

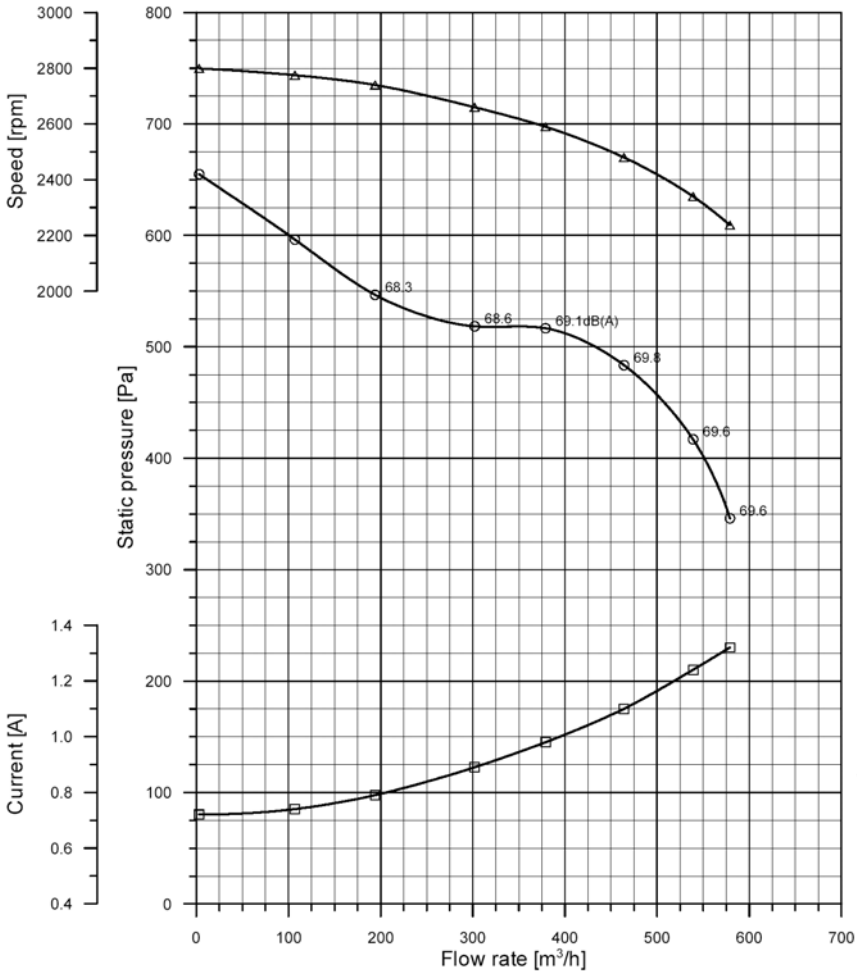

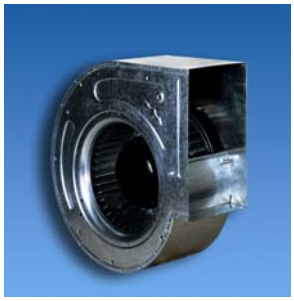

* The picture is only for display purposes of the range

Type:	SAIR 180/74
Motor:	S11C79
Test nr.:	S2236.000
Date:	15/01/03

Watt:	295 ass	Amp Max:	1.3
Volt:	230 / 1~	Prot.:	IP 44
Hz:	50	T.H.:	YES-IN
Poles:	2	Ins. Cl.:	B
µF:	8/450 V.		

Motor regulation: NO

Air Density (γ): 1.20 kg/m³
Installation type : free inlet, free outlet
dB(A) free field noise measurements at 1 m

This test data obtained in a laboratory registered by AMCA, for AMCA 210/99 air performance testing.
Data is not certified by AMCA

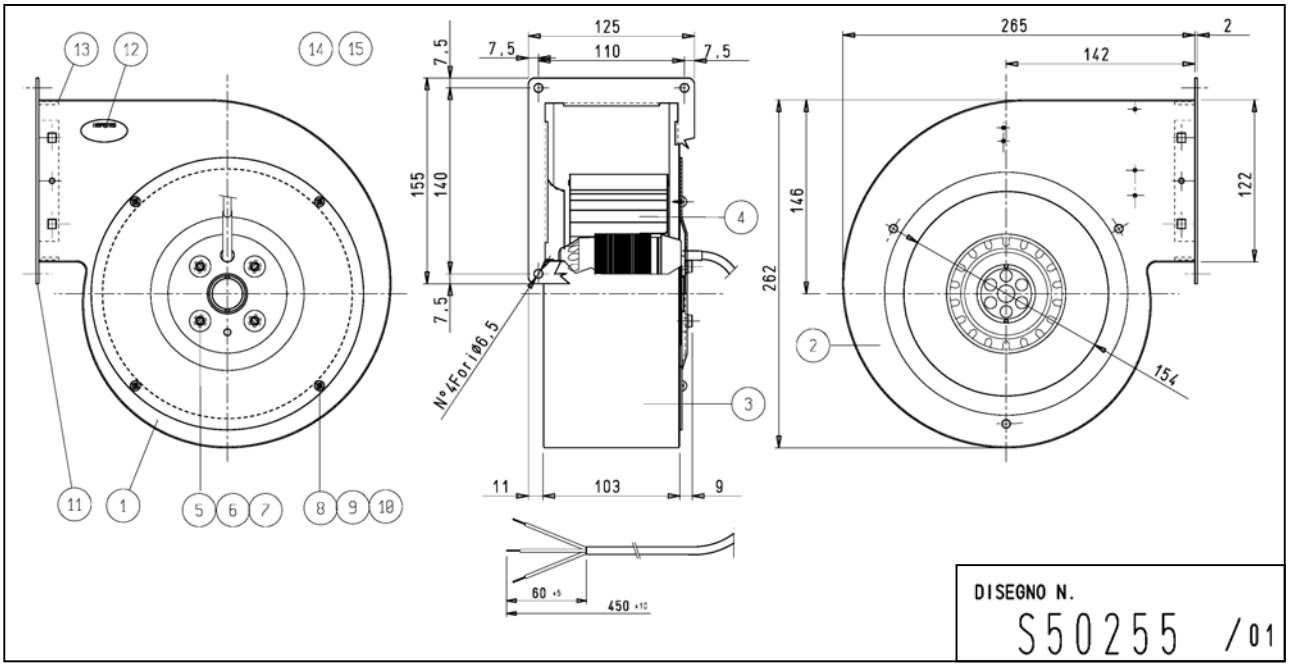

SAIR 180/74 - cod. S50257

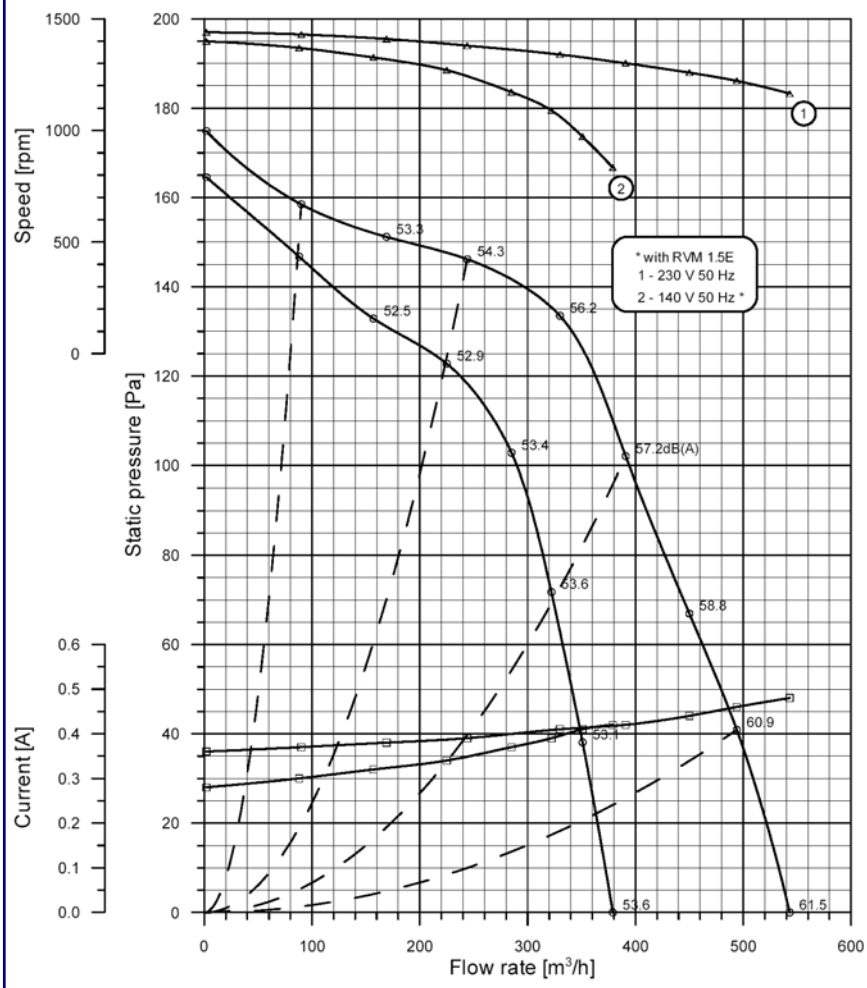

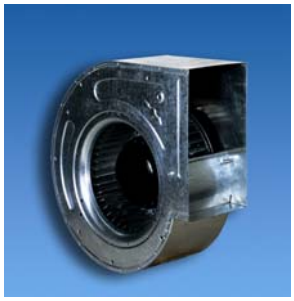

* The picture is only for display purposes of the range

Type:	SAIR 180/74
Motor:	S11C81
Test nr.:	S2247.*
Date:	24/01/03

Watt:	110 Ass	Amp Max:	0.47
Volt:	230 1~	Prot.:	IP 44
Hz:	50	T.H.:	YES-IN
Poles:	4	Ins. Cl.:	B
µF:	3.15 / 450 V		

Motor regulation: electronic

Air Density (γ): 1.20 kg/m³
Installation type : free inlet, free outlet
dB(A) free field noise measurements at 1 m

This test data obtained in a laboratory registered by AMCA, for AMCA 210/99 air performance testing.
Data is not certified by AMCA

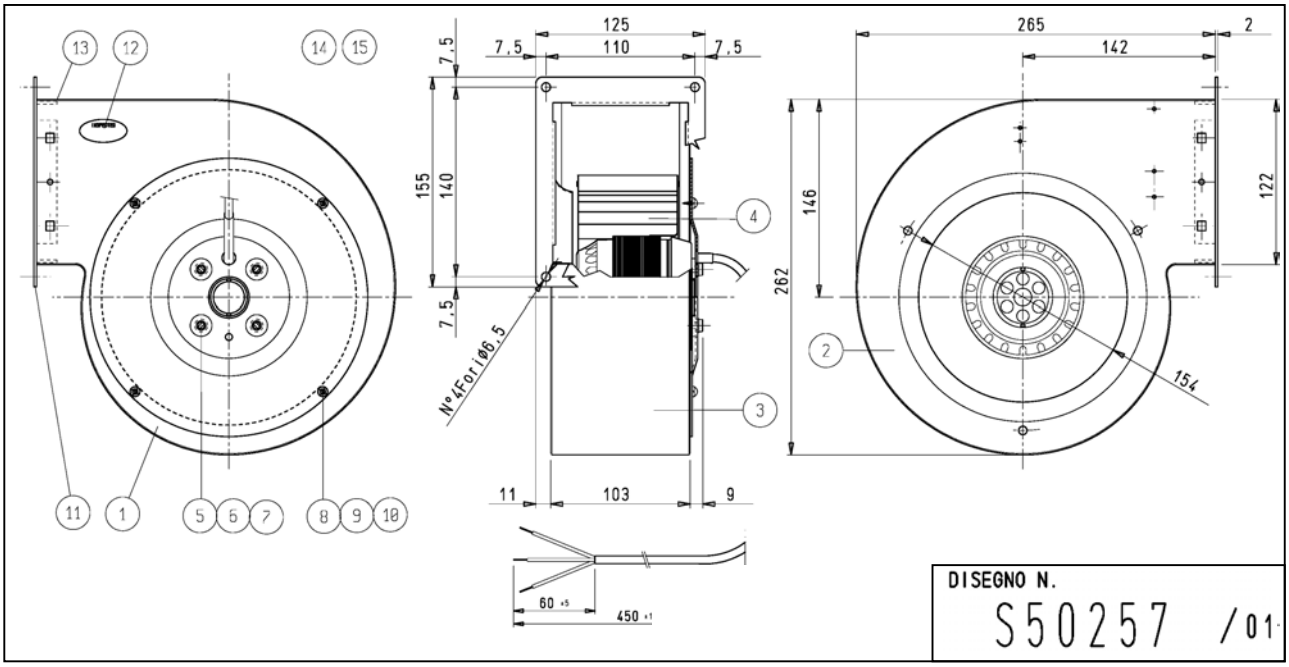

SAIR 180/92 - cod. S50258

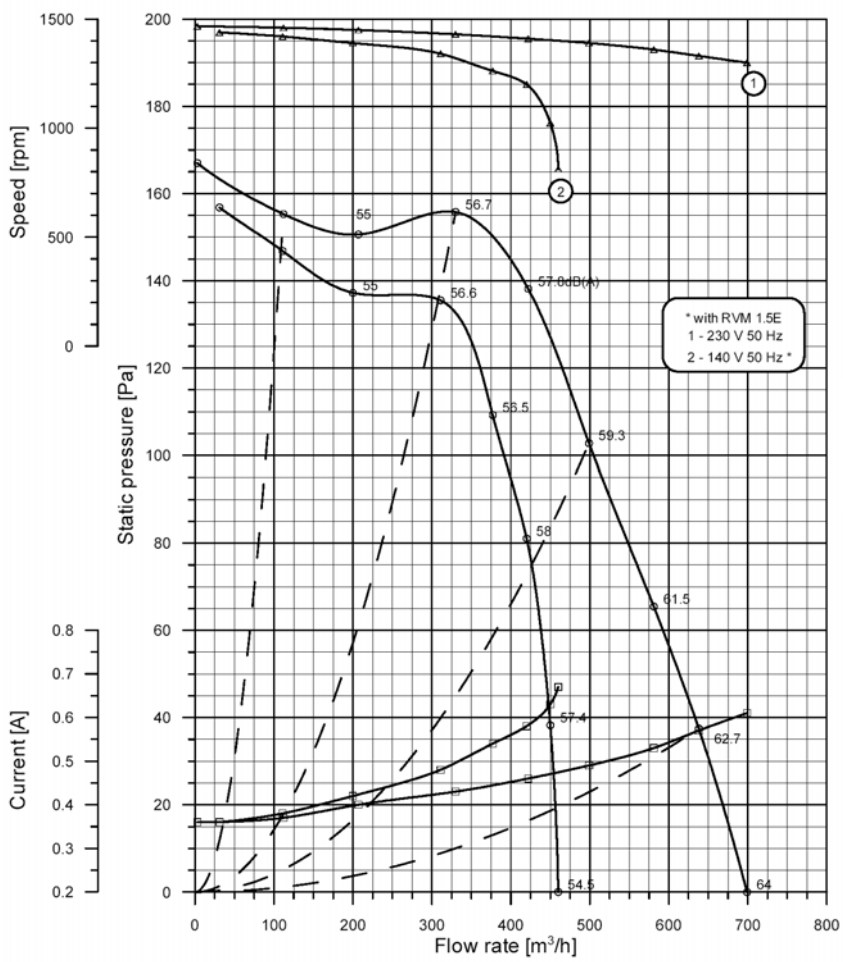

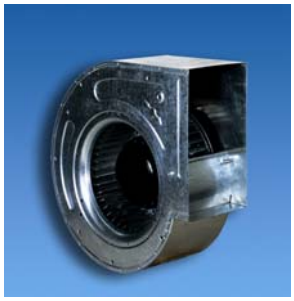

* The picture is only for display purposes of the range

Type:	SAIR 180/92
Motor:	S11C82
Test nr.:	S2237.*
Date:	16/01/03

Watt:	170 Ass	Amp Max:	0.61
Volt:	230 1~	Prot.:	IP 44
Hz:	50	T.H.:	YES-IN
Poles:	4	Ins. Cl.:	B
µF:	5 / 450 V		

Motor regulation: electronic

Air Density (γ): 1.20 kg/m³
Installation type : free inlet, free outlet
dB(A) free field noise measurements at 1 m

This test data obtained in a laboratory registered by AMCA, for AMCA 210/99 air performance testing.
Data is not certified by AMCA

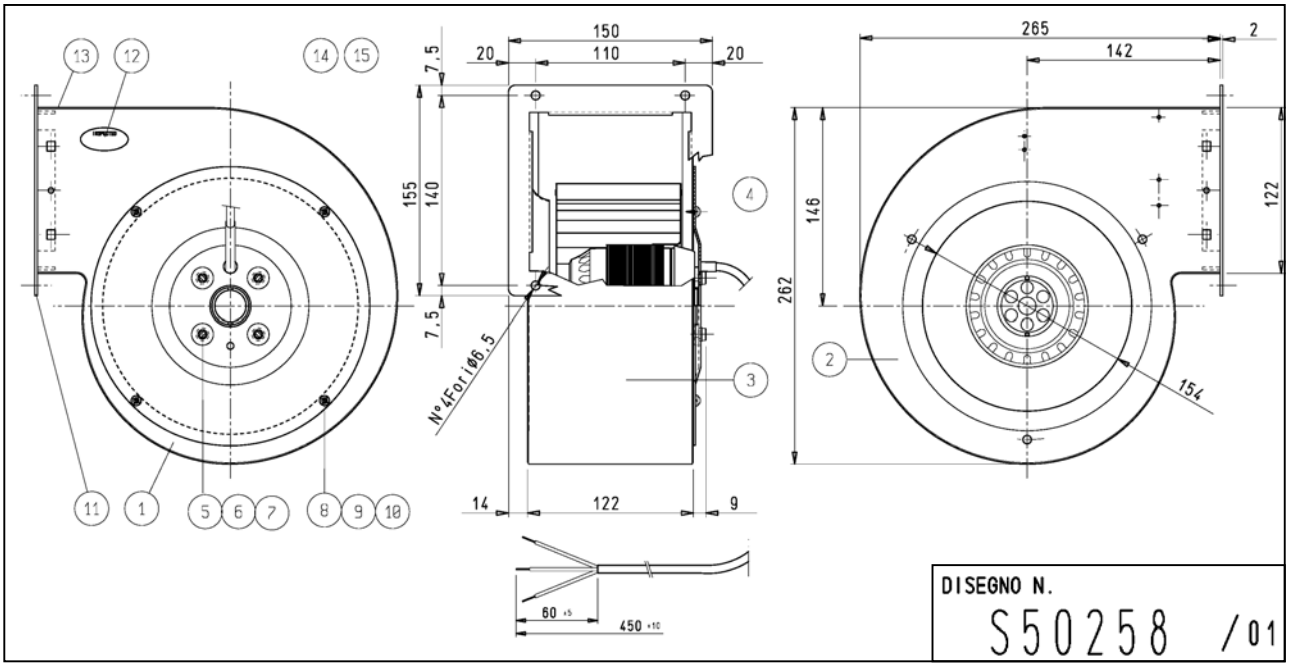

SAIR 9/4 - cod. 624500

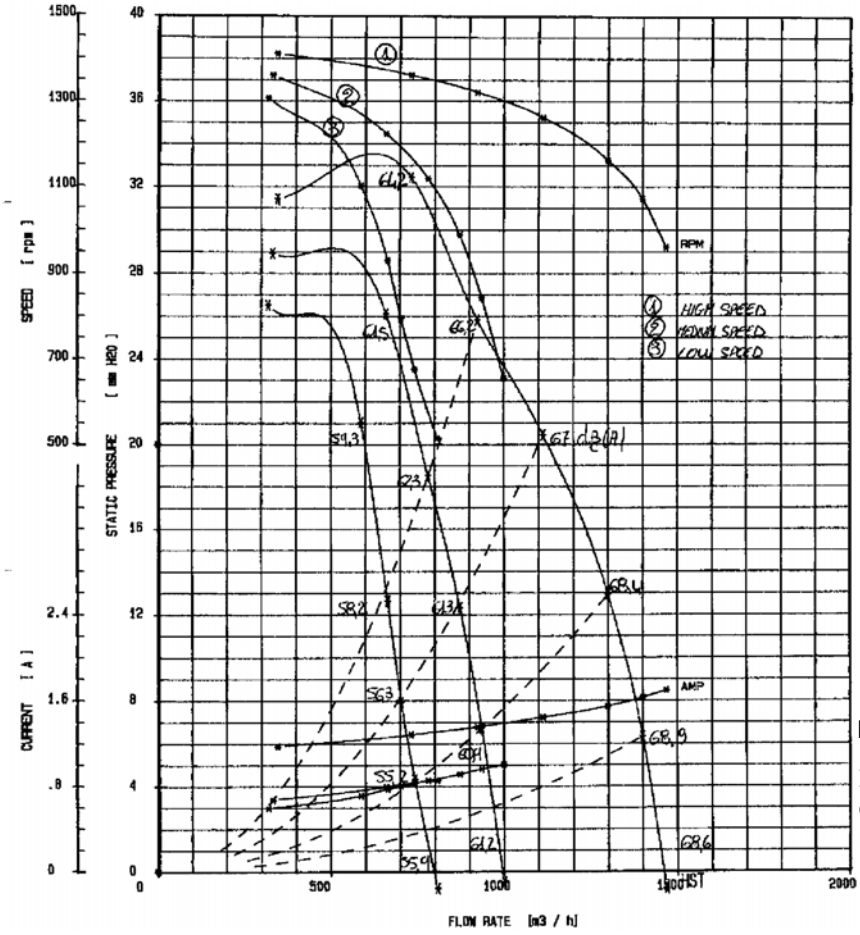

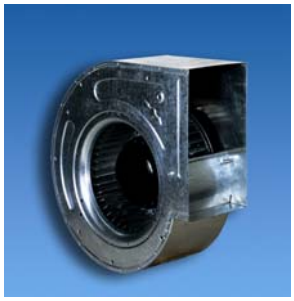

* The picture is only for display purposes of the range

TYPE	SAIR 9/4
MOTOR	S11C88-13/50
TEST	s2103.b00
DATE	11-06-2002

WATT	184		AMP MAX	1.7
VOLT	230		PROT.	IP 44
HZ	50		T.H.	YES - OUT
mmF	8	Vc 450	INS. CL.	F
POLES	4			

Motor regulation: NO

Installation type: free inlet * ducted outlet
db (A) free field noise measurements at m 1

This test data obtained in a laboratory registered by AMCA, for AMCA 210/99 air performance testing.
Data is not certified by AMCA