Бука / Buka

комод / cabinet **KOM4S**

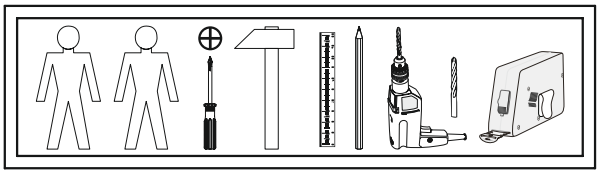

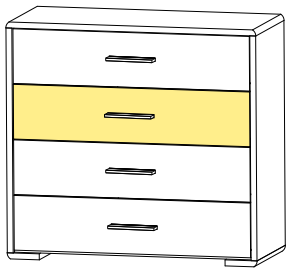

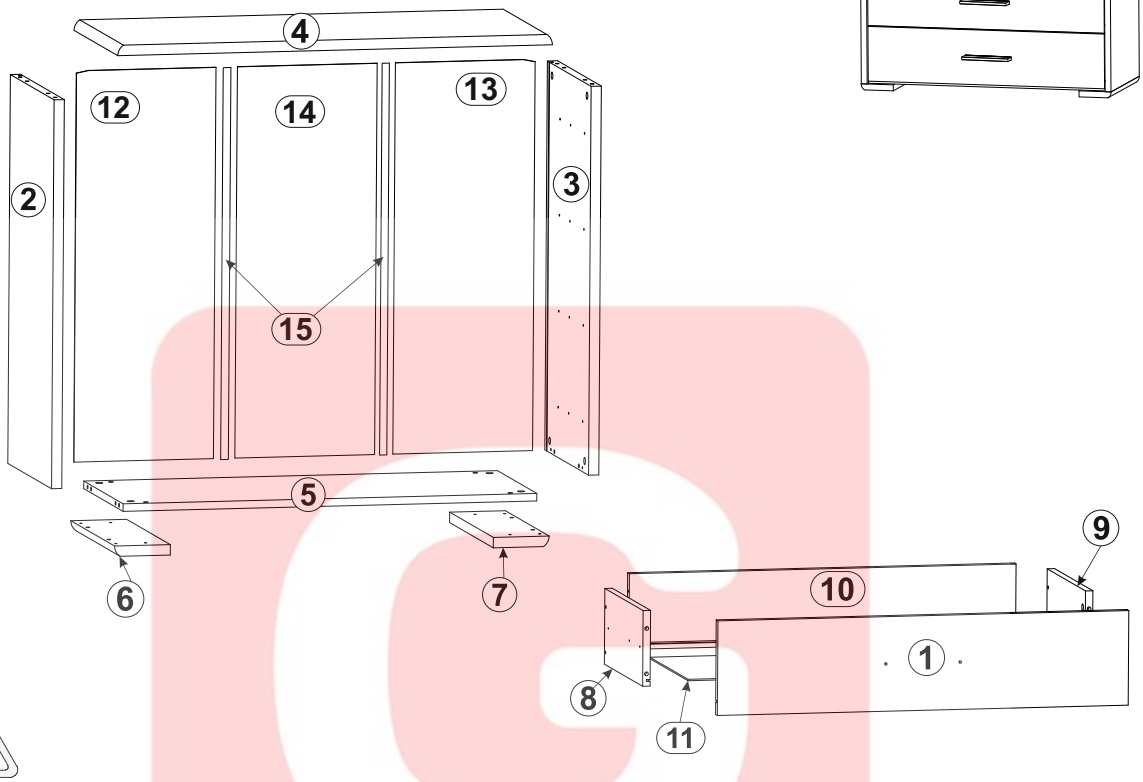

§1

A	B	C		D
1	BK1 011	884	200	2/2
2	BK1 113	822	400	1/2
3	BK1 114	822	400	1/2
4	BK1 210	935	400	1/2
5	BK1 311	890	360	1/2
6	BK1 204	120	400	1/2
7	BK1 205	120	400	1/2

8	BK1 554	350	160	1/2
9	BK1 555	350	160	1/2
10	BK1 556	832	160	1/2
11	BK1 909	847	349	1/2
12	BK1 910	827	300	1/2
13	BK1 911	827	300	1/2
14	BK1 912	827	300	1/2
15	LH 805	805	14	1/2

GERBOR.KIEV.UA

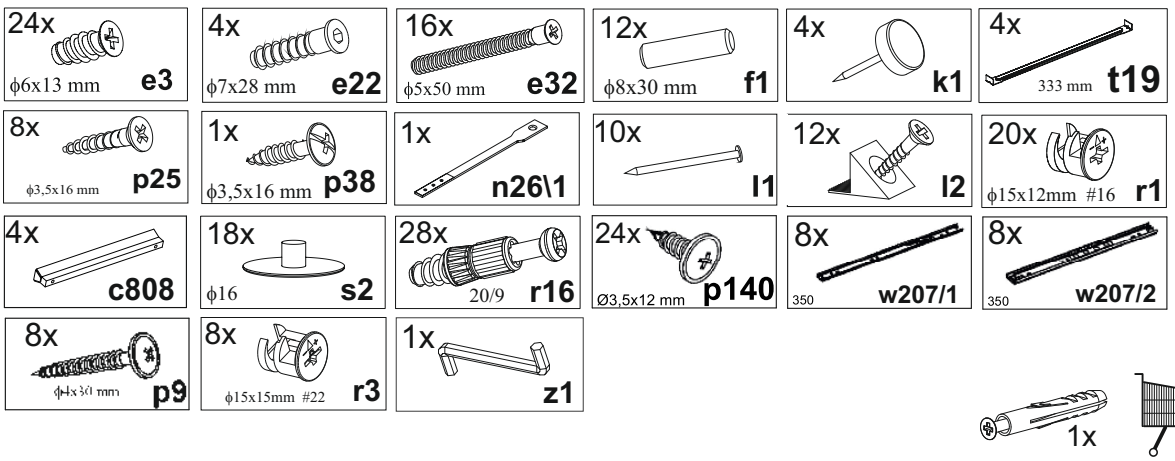

1

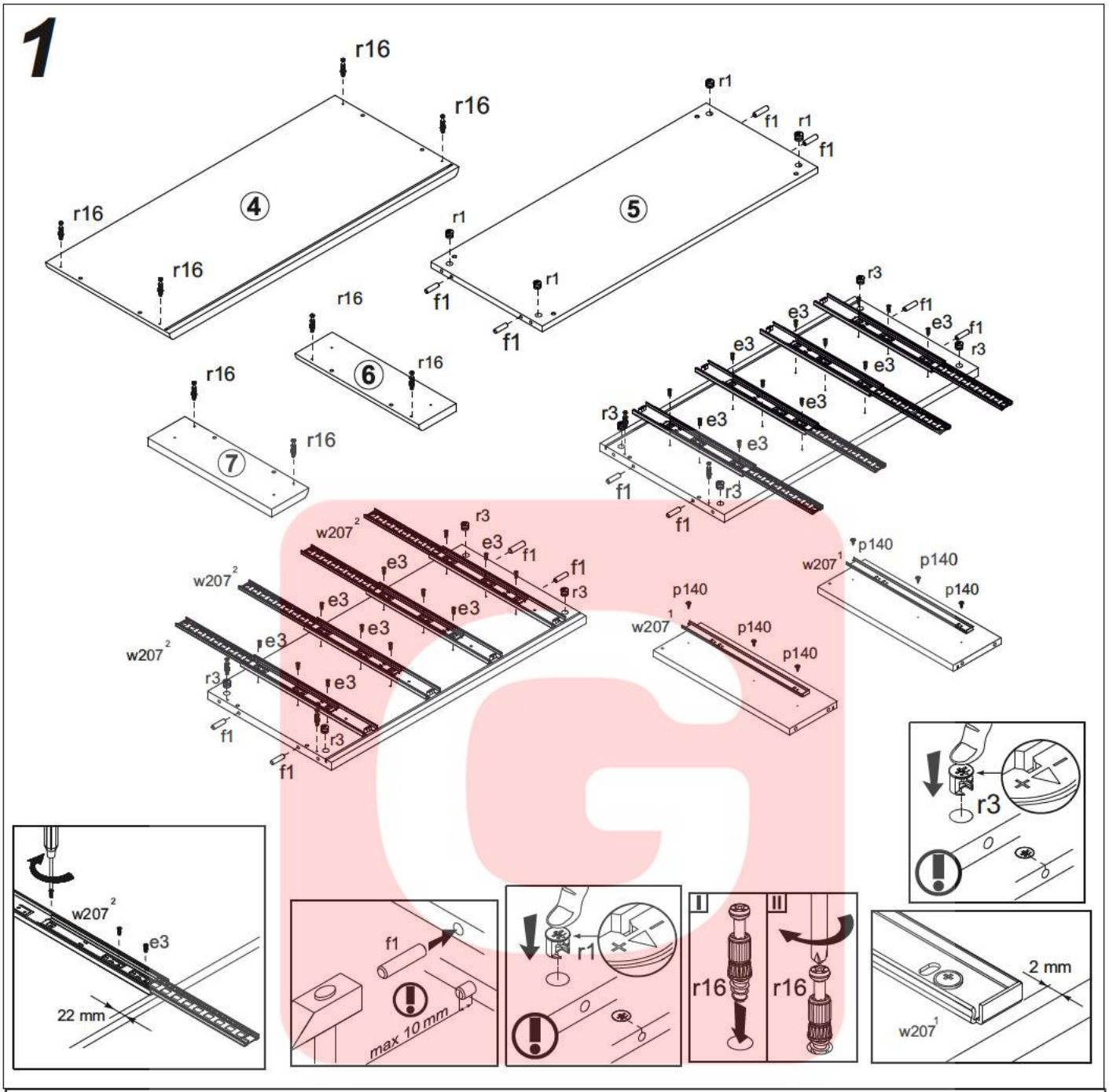

2

§6

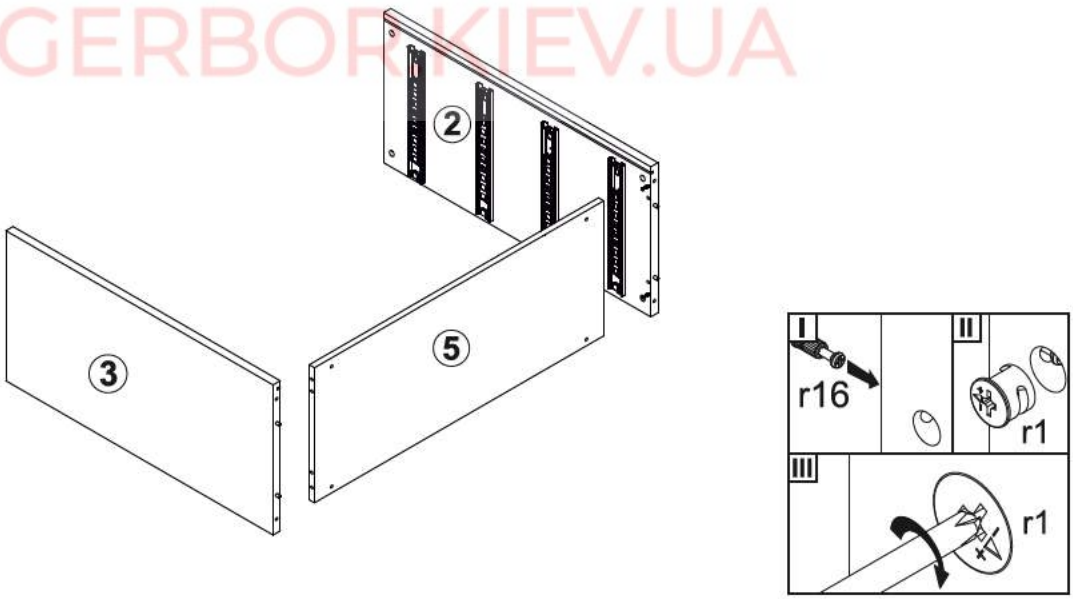

GERBOR.KIEV.UA

3

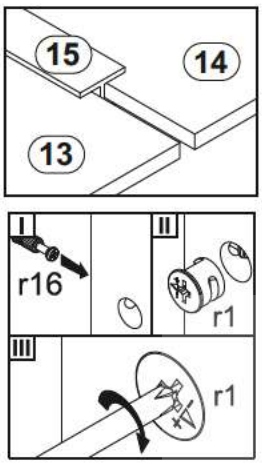

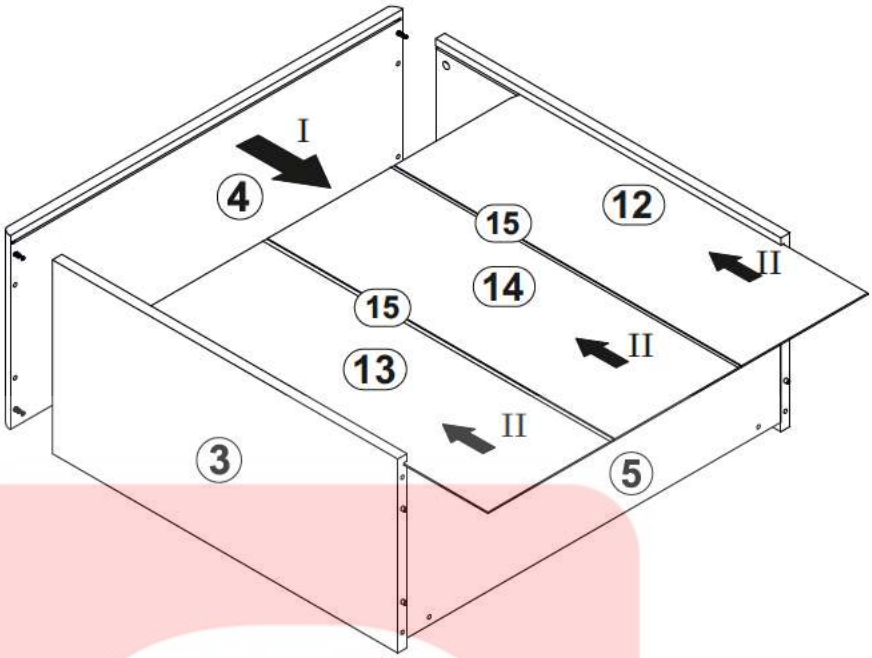

4

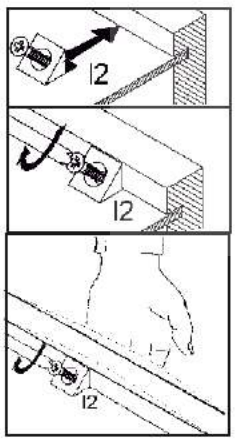

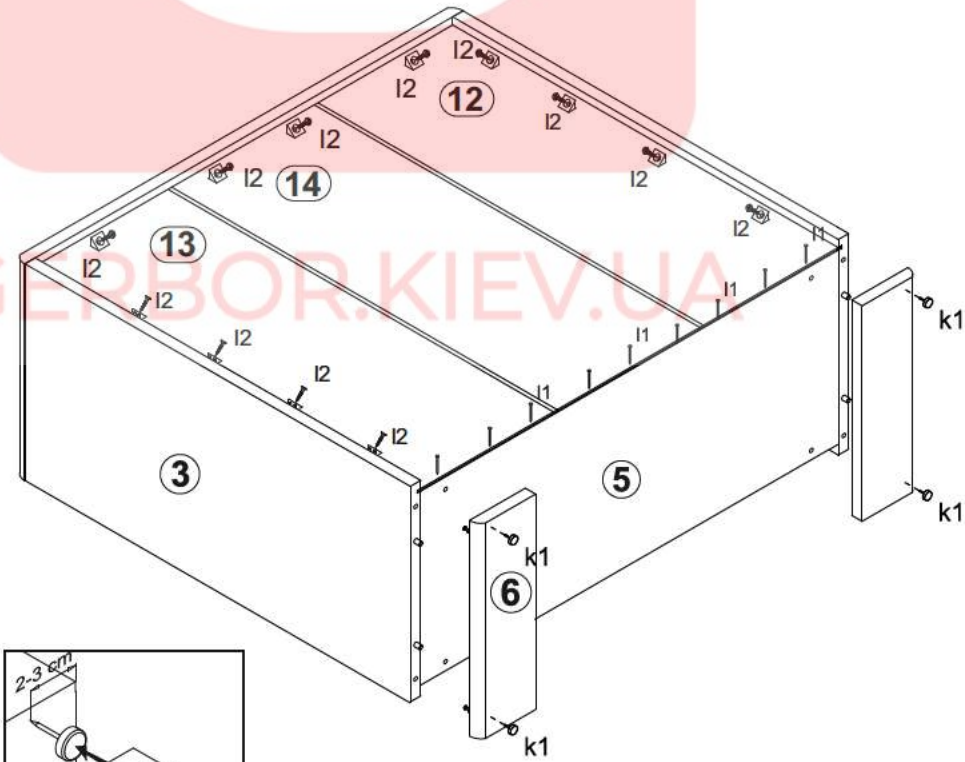

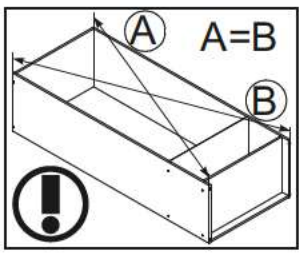

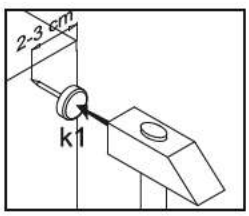

GERBOR.KIEV.UA

5

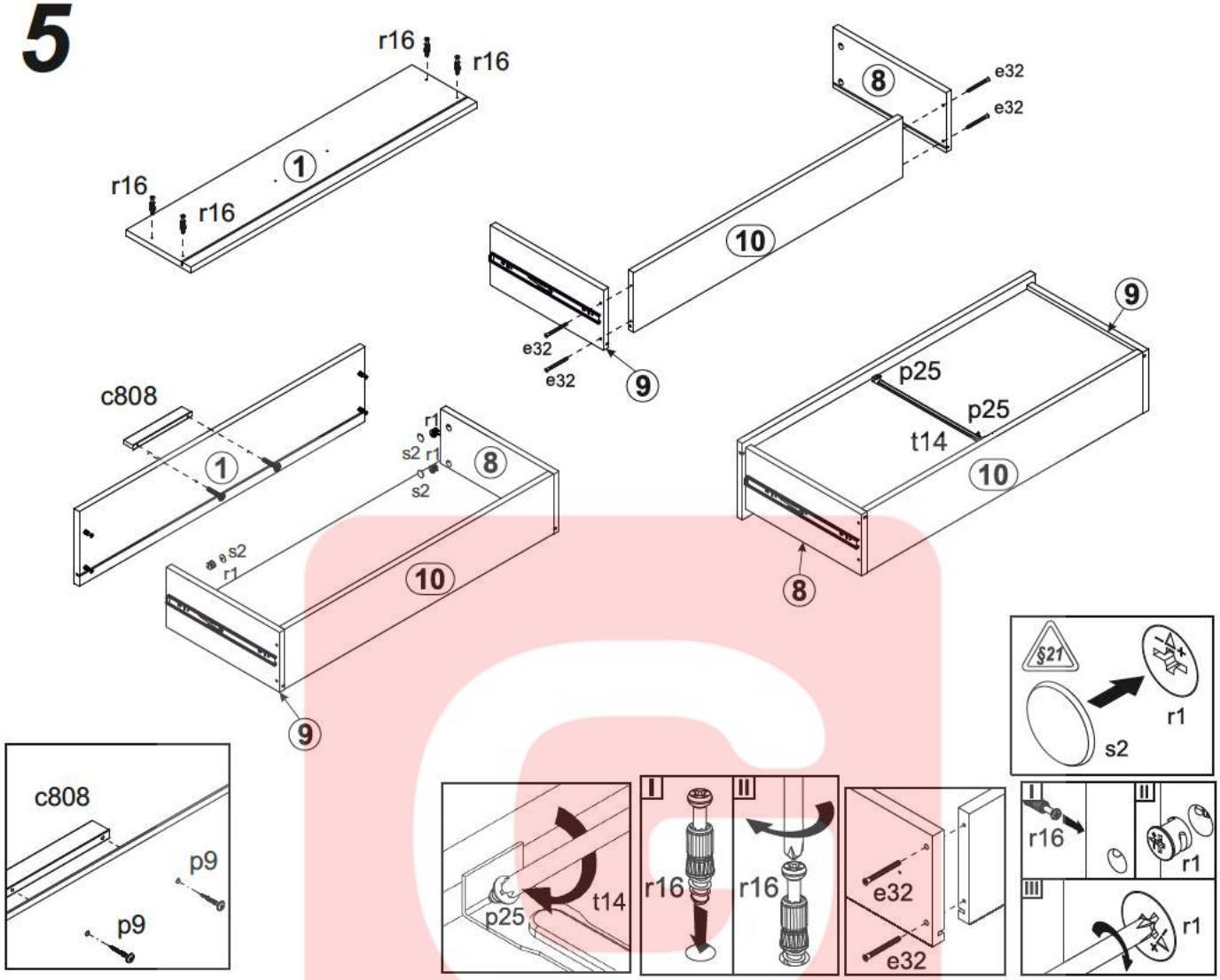

6

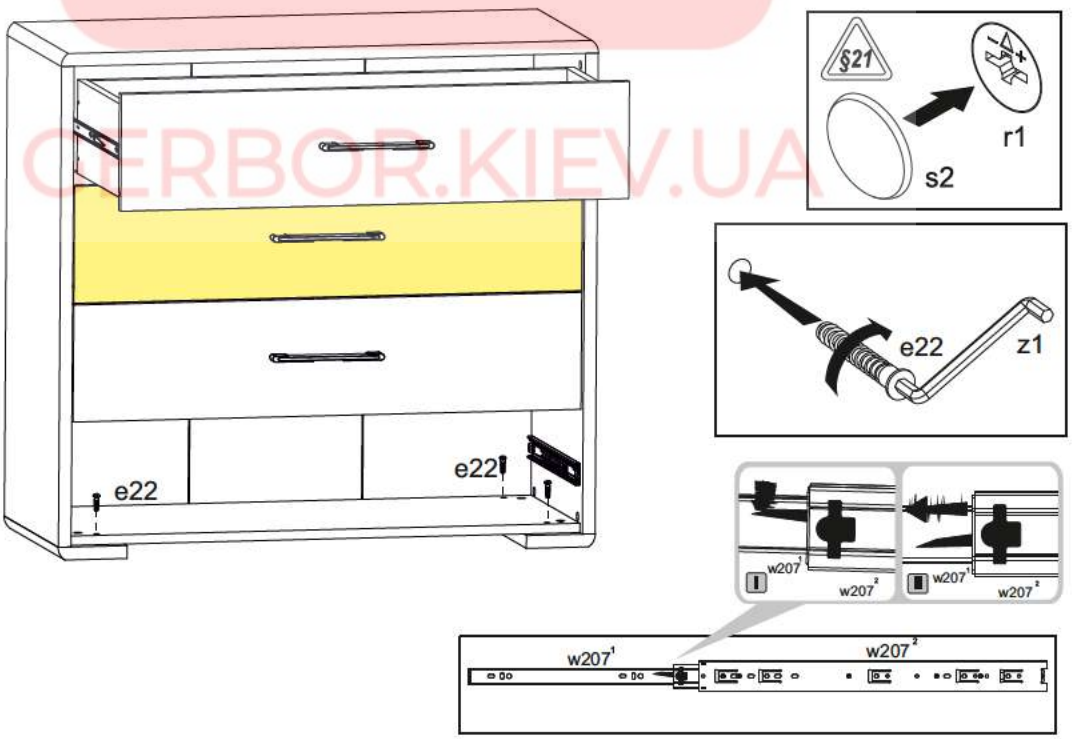

CERBOR.KIEV.UA