IMMERGAS	SERIAL NUMBER START OF SERIES	12/04/17	VICTRIX TERA 32 1	144DE
	7083692	3.027371		

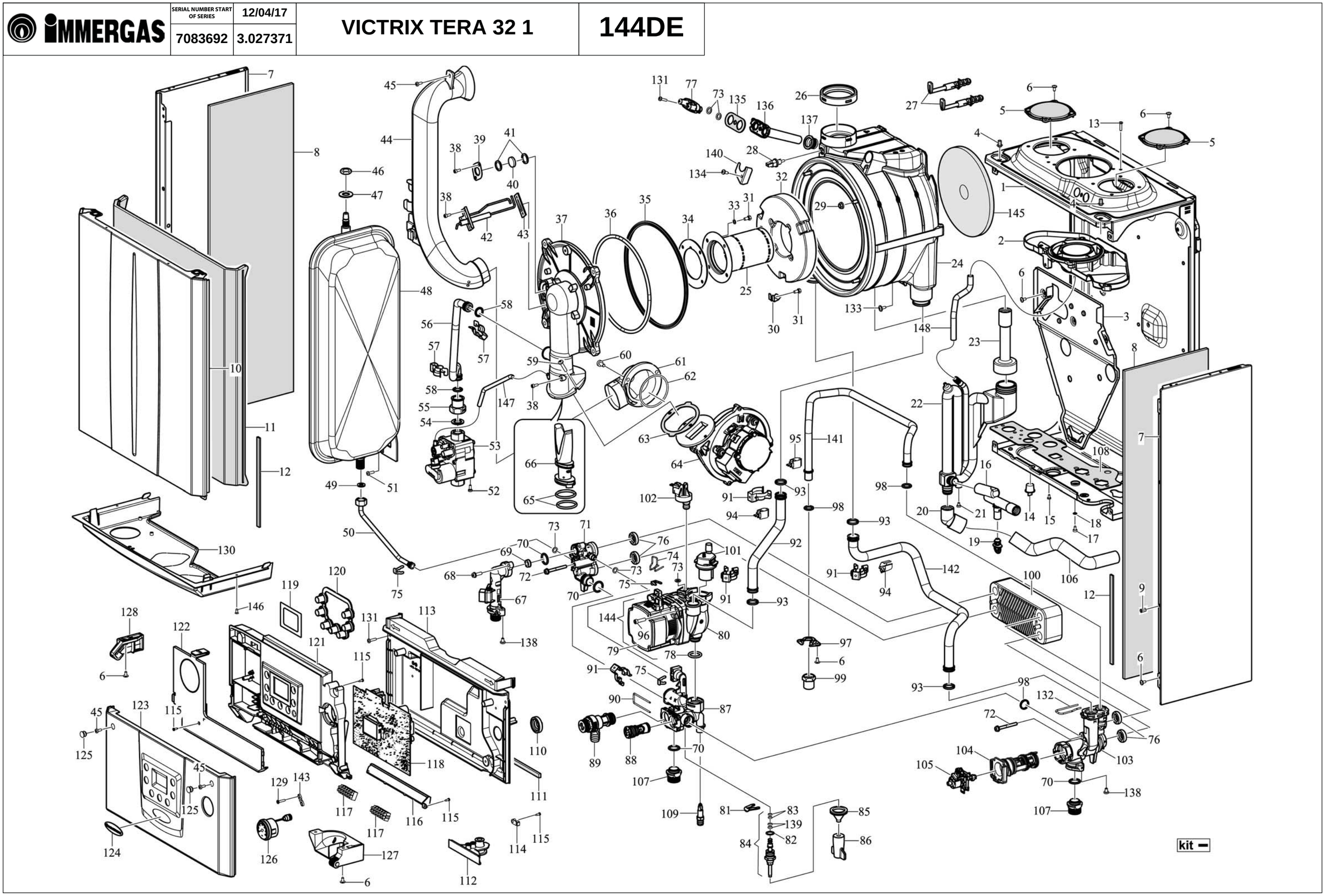

N.	CODE	DESCRIPTION	SERIAL NUMBER START OF SERIES
-	3.026372	Complete control panel	
-	3.027025	Hydraulic assembly	
-	3.027858	LPG gas conversion kit	
-	3.027859	G20 gas conversion kit	
1	3.026429	Frame group	
2	1.039234	Flue connection flange	
3	2.015731	Module mount bracket	
4	1.019438	Closed rivet	
5	1.029280	Cap for hole d.80	
6	1.2275	Flat pointed crossheaded self-tapping screw (4.2x9.5)	
7	2.015748	Casing side	
8	1.039360	Casing insulating panel	
9	1.036912	Open rivet (M4)	
10	2.015664	Front casing	
11	1.039233	Front casing insulating panel	
12	1.034871	Adhesive foam strip (d.8x3)	
13	1.8532	Crossheaded self-tapping screw (3,9x16)	
14	1.031531	D.14,2 plug	
15	1.1656	Nickel-plated crosshead self-tapping screw (3,5x6,4)	
16	1.037890	Discharge pipe	
17	1.016246	Crossheaded self-forming screw (M4x8)	
18	1.4246	Lock washer (M4)	
19	1.039744	Outlet joint plug	
20	1.023581	Rubber adapter	
21	1.0153	Crossheaded screw (M4x6)	
22	1.039244	Plastic siphon	
23	1.039684	Condensate drain extension	
24	1.039243	Condensing exchanger	
25	1.040335	Burner	
26	1.033913	Epdm gasket for expulsion pipe	
27	1.5899	Wall plug package (d.10x50)	
28	1.024296	Flue probe with O-ring	
29	1.025911	Nut (M6)	
30	2.015728	Insulation fixing plate	
31	1.033429	M5x10 hex screw	
32	1.040668	Manifold panel	
33	1.012468	Stainless steel elastic washer (M5)	
34	1.025910	Graphite gasket for burner	
35	1.025689	Gas manifold gasket	
36	1.038865	Cord packing	
37	1.039152	Gas manifold	
38	1.027485	Hex socket screw (M4x10)	
39	2.013322	Flange for module cover inspection hole	
40	1.034606	Ceramic glass (d.20)	
41	1.024898	Gasket for module inspection hole	
42	1.039673	Ignitor and detection electrode	
43	1.030251	Ignition electrode gasket	
44	1.039128	Air intake pipe	
45	1.7349	Crossheaded screw (M4x10)	
46	1.034660	Nut (G1/4")	
47	1.038277	Expansion vessel gasket	
48	1.039209	Expansion vessel (10 litres)	
49	1.023993	Gasket (14.8x8x2)	
50	1.034035	Expansion vessel hot water manifold pipe (d.8)	
51	1.0110	Crossheaded flat pointed self-tapping screw (4,2x13)	
52	1.8541	M4x10 screw, crosshead, swageform tropic.	
53	1.039944	Gas valve	
54	1.023992	Gasket (24x16x2)	
55	1.039268	Nozzle fitting d.6.00	
56	1.039140	Gas valve - manifold pipe (d.14)	
57	1.020393	Pipe clip (d.14)	
58	1.037816	13.94x2.62 O-ring, EP	
59	1.023578	Crossheaded screw (M5x25)	
60	1.0017	Crossheaded screw (M6x12)	
61	1.033902	Fan flange for pipe fixing	
62	1.026530	Nitrile O-Ring (63x3 sh)	
63	1.039174	Seal fan	
64	1.037037	Fan	
65	1.039237	Silicone O-ring (34,52x3,53, 70 sh)	
66	1.039153	Venturi	
67	1.035365	Flow switch	
68	1.030602	Hex socket screw (M5x16)	
69	1.032198	Flow limiter (14 litres)	
70	1.026459	Peroxide epdm O-Ring (17,86x2,62)	
71	1.032732	Inlet sanitary water body	
72	1.028645	Hex socket screw (M5x45)	
73	1.026457	Epdm O-Ring (7,6x2,62, 70 sh)	
74	1.031892	Pressure switch locking clip	
75	2.014033	Metal-sheet clip (d.9)	
76	1.028559	Heat exchanger gasket	
77	3.026794	Flue sampling point cap with pressure test points	
78	1.029596	19.8x3.6 O-ring	
79	1.033590	Pump motor	
80	1.033591	Pump body	
81	2.014178	Metal-sheet clip (d.13,5)	
82	1.030216	Nbr O-Ring (11,91x2,62,70sh)	
83	1.033226	Nbr O-Ring (2,84x2,62,70sh)	
84	3.022615	Filling valve group	
85	1.030572	D.28 grommet	
86	1.032017	Plastic knob	
87	1.028555	Return manifold	
88	3.021689	By-pass complete cartridge	
89	1.028561	Safety valve (3 bar)	
90	1.029426	Clip	
91	1.038458	Pipe clip (d.18)	
92	1.039137	Condensation module - pump pipe (return) (d.18)	
93	1.033854	Epdm O-Ring (18,00x2,8, 83sh)	
94	1.039476	NTC probe pipe d.18	
95	1.039477	NTC probe pipe d.14	
96	1.010289	Tropicalized hex socket screw (M5x16)	
97	2.015825	Pipe fixing flange	
98	1.023008	Peroxide epdm O-Ring (13,95x2,62)	
99	1.039685	Tube fitting 1/2"	
100	1.028659	16-plate exchanger	
101	1.027110	Automatic vent valve	
102	1.027277	Absolute pressure switch	
103	1.028548	Housing, outlet manifold	
104	3.023234	Complete cartridge	
105	1.033918	3-way valve motor	
106	1.019654	Flexible hose for siphon	
107	1.027137	Pump coupler fitting	
108	1.039207	Sealed chamber gasket	
109	1.027108	Drain fitting	
110	1.035696	Cable gasket	
111	1.037378	Adhesive foam strip (d.8x5)	
112	1.039332	Grommet	
113	1.038623	PCB cover	
114	1.4072	Clip with clamp screw hole	
115	1.035248	Crossheaded self-tapping screw (3x10)	
116	1.035385	Components connection clamping plate	
117	1.039552	6-way terminal block	
118	1.037030	PCB	
119	1.039226	Adhesive for display	
120	1.038624	Silicone keyboard	
121	1.038583	Bezel, control panel	
122	1.038619	Connection group cover	
123	1.039470	Esthetic cover	
124	1.038192	"Immergas" logo adhesive plate	
125	1.024204	Rubber buffer	
126	1.034600	Manometer	
127	1.036913	Control panel right hinge	
128	1.035895	Control panel left hinge	
129	1.037773	Crossheaded self-tapping screw (3,5x16)	
130	1.034116	Plastic grid, bottom	
131	1.6985	Crossheaded screw (M4x16)	
132	1.028605	Outlet manifold clip	
133	1.037216	4,2x13 self-tapping screw	
134	1.5244	Cone pointed nickel-plated self-tapping screw (4,8x13)	
135	1.039155	Telescopic joint seal	
136	1.039171	Telescopic joint	
137	1.039235	Lip gasket	
138	1.1176	Crossheaded screw (M5x8)	
139	1.029659	6x2 O-ring, epdm	
140	2.016007	Bracket, gasket hanger	
141	1.039686	D.14 pipe, hot outlet	
142	1.039164	D.18 pipe, module - delivery manifold	
143	1.7908	Black cable clamp	
144	3.023221	UPM3 7MCA pump group (for ICHS hydraulic group)	
145	1.040351	Insulating panel, rear	
146	1.4066	Self-tapping screw (3,5x9,5)	
147	1.025986	Silicone pipe (4x8)	
148	1.016187	Silicone tube (8x12)	